stryker® Medical

6100

Model 6100 Rugged™ M1 Roll-In System

Modèle 6100 Rugged™ M1 Roll-In System

Rugged™ M1-Ambulanz-Transportlieges der Reihe 6100 unterstützen

Rugged™ M-1 Sistema Roll-in

Modelo 6100 Rugged™ M1

Modell 6100 Rugged™ M-1 Inrullsystem

Malli 6100 Rugged™ M-1 Rullausjärjestelmä

OPERATIONS/MAINTENANCE MANUAL
MANUEL D'ENTRETIEN / D'UTILISATION
BETRIEBS-/WARTUNGSHANDBUCH
BEDIENINGS-/ONDERHOUDSHANDLEIDING
MANUALE OPERATIVO/DI MANUTENZIONE
MANUAL DE FUNCIONAMIENTO Y MANTENIMIENTO
MANUAL DE OPERAÇÃO / MANUTENÇÃO
BETJENINGS-/VEDLIGEHOLDELSESMANUAL
ANVÄNDAR-/UNDERHÅLLSMANUAL
KÄYTTÖ- JA HUOLTO-OHJE

For replacement parts or service, contact your Stryker representative.
Pour les pièces de rechange vous pouvez vous adresser à votre fournisseur de Stryker.
Für Ersatzteile können Sie sich an Ihren Stryker-Lieferanten wenden.
Voor reserveonderdelen kunt u zich wenden: tot uw Stryker leverancier.
Per i pezzi di ricambio potete rivolgerVi al Vostrofornitore di prodotti Stryker.
Para piezas de recambio Uds. pueden dirigirse a su proveedor de Stryker.
Para obtenção de peças sobressalentes favordirigir-se ao seu vendedor Stryker.
Henvend Dem venligst til Deres Stryker forhandler for reservedele eller teknisk assistance.
Reservdelar och teknisk rådgivning får du av din närmaste STRYKER-distributör.
Varaosat ja teknisiä neuvoja saat Stryker-välittäjältäsi.

Table of Contents

English

Table of Contents

English

Notes

English

INTRODUCTION

This manual is designed to assist you with the operation and maintenance of the 6100 Series RUGGED™ M1 Ambulance Cot. Read it thoroughly before using the equipment or beginning any maintenance on it.

WARNING / CAUTION / NOTE DEFINITION

The words WARNING, CAUTION and NOTE carry special meanings and should be carefully reviewed.

WARNING

The personal safety of the patient or user may be involved. Disregarding this information could result in injury to the patient or user.

CAUTION

These instructions point out special procedures or precautions that must be followed to avoid damaging the equipment.

NOTE

This provides special information to make maintenance easier or important instructions clearer.

Limited Warranty:

Stryker Medical Division, a division of Stryker Corporation, warrants to the original purchaser that its products should be free from defects in material and workmanship for a period of one (1) year after date of delivery. Stryker's obligation under this warranty is expressly limited to supplying replacement parts and labor for, or replacing, at its option, any product which is, in the sole discretion of Stryker, found to be defective. Stryker warrants to the original purchaser that the frame and welds on its beds will be free from structural defects for as long as the original purchaser owns the bed. If requested by Stryker, products or parts for which a warranty claim is made shall be returned prepaid to Stryker's factory. Any improper use or any alteration or repair by others in such manner as in Stryker's judgement affects the product materially and adversely shall void this warranty. No employee or representative of Stryker is authorized to change this warranty in any way.

Stryker Medical ambulance cots are designed for a 5 year expected life under normal use conditions and appropriate periodic maintenance as described in the maintenance manual for each device.

This statement constitutes Stryker's entire warranty with respect to the aforesaid equipment. STRYKER MAKES NO OTHER WARRANTY OR REPRESENTATION, EITHER EXPRESSED OR IMPLIED, EXCEPT AS SET FORTH HEREIN. THERE IS NO WARRANTY OF MERCHANTABILITY AND THERE ARE NO WARRANTIES OF FITNESS FOR ANY PARTICULAR PURPOSE. IN NO EVENT SHALL STRYKER BE LIABLE HEREUNDER FOR INCIDENTAL OR CONSEQUENTIAL DAMAGES ARISING FROM OR IN ANY MANNER RELATED TO SALES OR USE OF ANY SUCH EQUIPMENT.

To Obtain Parts and Service:

Stryker products are supported by a nationwide network of dedicated Stryker Field Service Representatives. These representatives are factory trained, available locally, and carry a substantial spare parts inventory to minimize repair time. Simply call your local representative, or call Stryker Customer Service at (800) 327–0770.

Supplemental Warranty Coverage:

Stryker has developed a comprehensive program of extended warranty options designed to keep your equipment operating at peak performance at the same time it eliminates unexpected costs. We recommend that these programs be activated *before* the expiration of the new product warranty to eliminate the potential of additional equipment upgrade charges. Stryker offers the following Supplemental Warranties:

Extended (Parts and Labor)

- All replacement parts (excluding mattresses and consumable items)
- Labor and travel for *all* scheduled and unscheduled calls
- Annual Preventive Maintenance Inspections and repairs
- JCAHO paperwork for preventive maintenance
- Priority Emergency Service

Standard (Labor Only):

- Labor and travel for *all* scheduled and unscheduled calls
- Annual Preventive Maintenance Inspections and repairs
- JCAHO paperwork for preventive maintenance
- Priority Emergency Service

Basic (Parts Only):

- All replacement parts (excluding mattresses and consumable items)
- Priority Emergency Service

Please call your local representative, or call (800) 327–0770 for further information

Warranty

Return Authorization:

Merchandise cannot be returned without approval from the Stryker Customer Service Department. An authorization number will be provided which must be printed on the returned merchandise. Stryker reserves the right to charge shipping and restocking fees on returned items.

SPECIAL, MODIFIED, OR DISCONTINUED ITEMS NOT SUBJECT TO RETURN.

Damaged Merchandise:

ICC Regulations require that claims for damaged merchandise must be made with the carrier within fifteen (15) days of receipt of merchandise. DO NOT ACCEPT DAMAGED SHIPMENTS UNLESS SUCH DAMAGE IS NOTED ON THE DELIVERY RECEIPT AT THE TIME OF RECEIPT. Upon prompt notification, Stryker will file a freight claim with the appropriate carrier for damages incurred. Claim will be limited in amount to the actual replacement cost. In the event that this information is not received by Stryker within the fifteen (15) day period following the delivery of the merchandise, or the damage was not noted on the delivery receipt at the time of receipt, the customer will be responsible for payment of the original invoice in full.

Claims for any short shipment must be made within thirty (30) days of invoice.

International Warranty Clause:

This warranty reflects U.S. domestic policy. Warranty outside the U.S. may vary by country. Please contact your local Stryker Medical representative for additional information.

Patent Information

Rugged Products are manufactured under the following patents:

United States	5,575,026
	5,537,700

Other Patents Pending

Summary of Safety Precautions

The following is a list of safety precautions that must be observed when operating or servicing this unit. The precautions are repeated throughout the manual, where applicable. Carefully read this list before using or servicing the unit.

WARNING

- Improper usage of the RUGGED™ Cot can cause injury to the patient or operator. Operate the cot only as described in this manual.
- Always use all restraint straps to secure the patient on the cot. An unrestrained patient may fall from the cot resulting in injury.
- Never leave a patient unattended on the cot or injury could result. Hold the cot securely while a patient is on the cot.
- The wheel lock is only intended to help prevent the cot from rolling while unattended. The wheel lock may not provide sufficient resistance on all surfaces or under loads.
- Never apply the wheel lock while a patient is on the cot. Tipping could occur if the cot is moved while the wheel lock is applied, resulting in injury to the patient or operator and/or damage to the cot.
- The caster steer lock knob and the casters must be in the locked position when loading/unloading the cot from a vehicle or loading tray system and when the cot height is changed or the cot may become unstable possibly resulting in injury to the patient or operator.
- When changing the height of the cot, always verify the base frame is securely locked into position before releasing your grip on the lift handles
- Loading, unloading and changing the position of the cot requires a minimum of one trained operator. The operator(s) must be able to lift the total weight of the patient, cot and any other items on the cot. (If additional assistance is needed, refer to the reference chart on page 1–19).
- Be sure the undercarriage has engaged and locked before removing the loading wheels from the patient compartment floor of the vehicle. An unlocked undercarriage will not support the cot and injury to the patient and/or operator could result.
- When changing the height of the cot, always verify the base frame is securely locked into position before relaxing your hold on the hand grips.
- Do not allow untrained helpers to assist in the operation of the cot. Untrained technicians/helpers can cause injury to the patient or themselves.
- Do not modify the RUGGED™ Cot. Modifying the cot can cause unpredictable operation resulting in injury to the patient or operator. Modifying the cot will also void its warranty (see page 1–5).
- Improper maintenance can cause injury or damage to the unit. Maintain the cot as described in this manual. Use only Stryker approved parts and maintenance procedures. Using unapproved parts and procedures could cause unpredictable operation and/or injury and will void the product warranty.
- Failure to properly clean or dispose of contaminated mattress or cot components will increase the risk of exposure to bloodborne pathogens and may cause injury to the patient or the operator.

CAUTION

- **Do not steam clean or ultrasonically clean this unit.** Clean the cot as described on page 1–35. Failure to comply with these instructions may invalidate any/all warranties

Set–Up Procedures

Unpack the cartons and check all items for proper operation. It is important that the RUGGED™ Cot is working properly before it is put into service. Have a qualified service person use the following list and the operation instructions to check the cot before it is put into service.

Litter

_____ All fasteners secure
_____ All welds intact, not cracked or broken
_____ No bent or broken components
_____ Perimeter bumpers intact
_____ Roller wheels rotate smoothly, no debris around axles
_____ Backrest operating properly (see page 1–45 for backrest adjustment procedure)
_____ Extension lift handles operating properly (4 total)
_____ Siderails operating properly (optional equipment)
_____ Knee Gatch/Trendelenburg operating properly (optional equipment)
_____ Litter retention pins secure and not bent or broken (4 total)
_____ Litter locks securely to base unit, roller guides not bent or broken
_____ Optional accessories intact and operating properly

Mattress

_____ No rips, cracks or punctures in mattress cover
_____ Mattress attaches to litter properly

Restraint System

_____ Buckle and tensioner systems operating properly
_____ No frayed or torn straps
_____ No loose or torn stitching

Base

_____ All fasteners secure
_____ All welds intact, not cracked or broken
_____ No bent or broken components
_____ Plastic wear strips intact (front/rear leg assemblies)
_____ Load wheels rotate smoothly, no debris around axles
_____ All wheels secure, rolling and swivelling properly, no debris in axles
_____ Caster steer lock system operating properly (see page 1–41 for detent force adjustment procedure)
_____ Wheel locks operating properly (see page 1–40 for pedal locking force adjustment procedure)
_____ Undercarriage loads and unloads properly from the vehicle
_____ Green release lever and button intact and operating properly
_____ Undercarriage is secure and operates properly in all height positions
_____ Red release levers intact and operating properly (both ends)

Base (Continued)

_____ Litter locks securely onto base unit; litter release mechanism operating properly

_____ Base retention pin secure and not bent or broken

_____ Extendable lift handles intact and operating properly (optional equipment)

_____ Optional accessories intact and operating properly

_____ Base locks securely into cot fastener system (see ATTENTION below)

The patient compartment of the vehicle in which the RUGGED™ Cot will be used must have:

- A smooth rear edge for cot loading.
- A level floor or tray system large enough for the folded cot and cot fastener system.
- Stryker Cot Fastener System
  – Model 6372 Center Mount, Straight Guides
  – Model 6373 Center Mount, DIN Guides
- Floor or tray system loading height between 27.0 inches (68.6 centimeters) and 31.0 inches (78.8 centimeters)

When necessary, modify the vehicle to fit the cot. Do not modify the cot.

⚠ **WARNING**

Do not modify the RUGGED™ Cot. Modifying the cot can cause unpredictable operation resulting in injury to the patient or operator. Modifying the cot will also void its warranty (see page 1–5).

⚠ **ATTENTION**

The Model 6100 Ambulance Cot, in combination with the Model 6372 or Model 6373 Cot Fastener Systems, are designed in accordance to BS EN 1789, Medical Vehicles and their Equipment – Road Ambulances. The Cot Fastener System must be installed by qualified personnel to be in conformance to this standard. 1/4” steel backing plates (or the equivalent) are recommended beneath the mounting surface (ambulance floor or tray system) at all mounting points. Before putting the system into service, test the installation using BS EN 1789 as a minimum.

Cot Fastener Installation

The Stryker Model 6372 and 6373 Cot Fastener systems are designed to be compatible only with cots which conform to the installation specifications listed on page 1–11. Ambulance cots which currently meet these specifications are:

Stryker

Model 6100 M1 Roll–In System

Ferno–Washington

Model X–2*

WARNING

It is the responsibility of the cot operator to ensure that the cot being used in the Stryker Model 6372 or 6373 Cot Fastener Systems meets the installation specifications listed on page 1–11. Injury may result if a non–compatible cot is used in the Stryker Model 6372 or 6373 Fastener System.

For more detailed installation and operation instructions for the Stryker Model 6372 and 6373 Cot Fastener systems, refer to part number 6372–90–11 Rugged™ Cot Fastener Installation/Operation Instructions.

ATTENTION

The Model 6100 Ambulance Cot, in combination with the Model 6372 or Model 6373 Cot Fastener Systems, are designed in accordance to BS EN 1789, Medical Vehicles and their Equipment – Road Ambulances. The Cot Fastener System must be installed by qualified personnel to be in conformance to this standard. 1/4” steel backing plates (or the equivalent) are recommended beneath the mounting surface (ambulance floor or tray system) at all mounting points. Before putting the system into service, test the installation using BS EN 1789 as a minimum.

* Stryker is not responsible for changes in specifications to other manufacturer’s cots.

Cot Fastener Installation

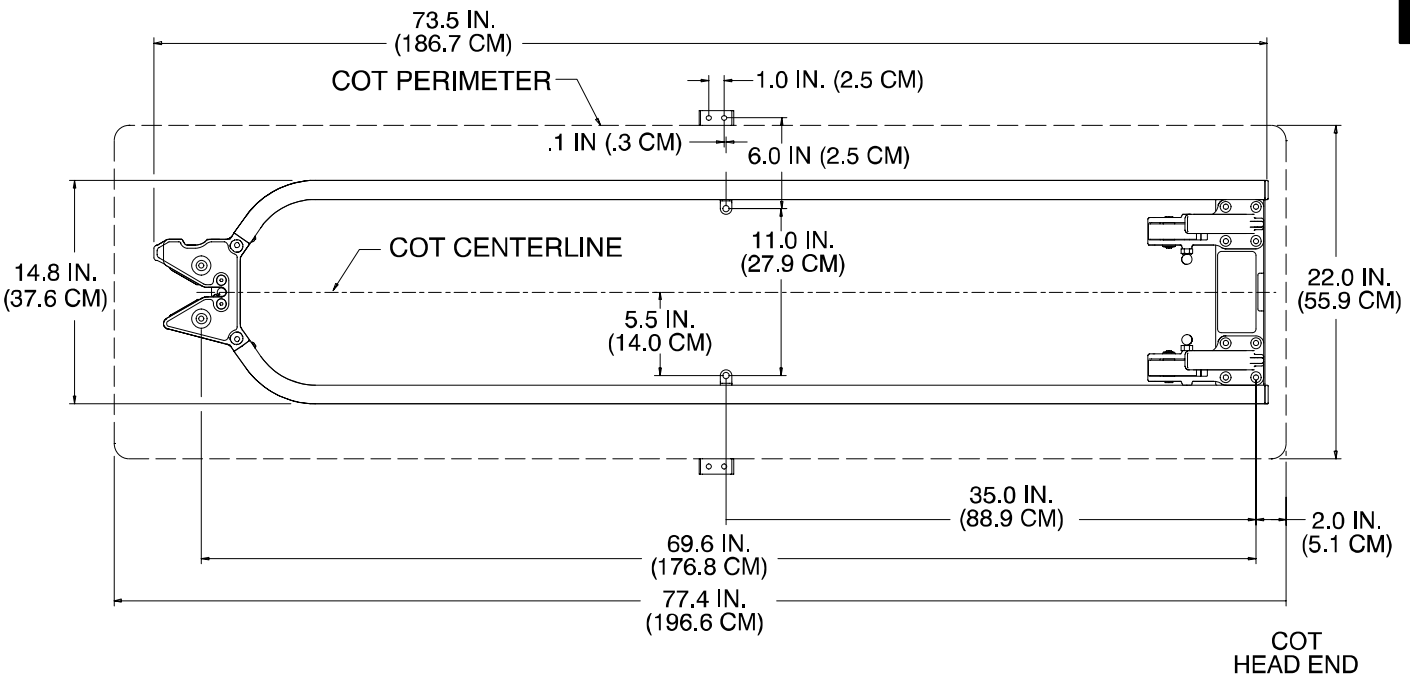

VIEW 2A

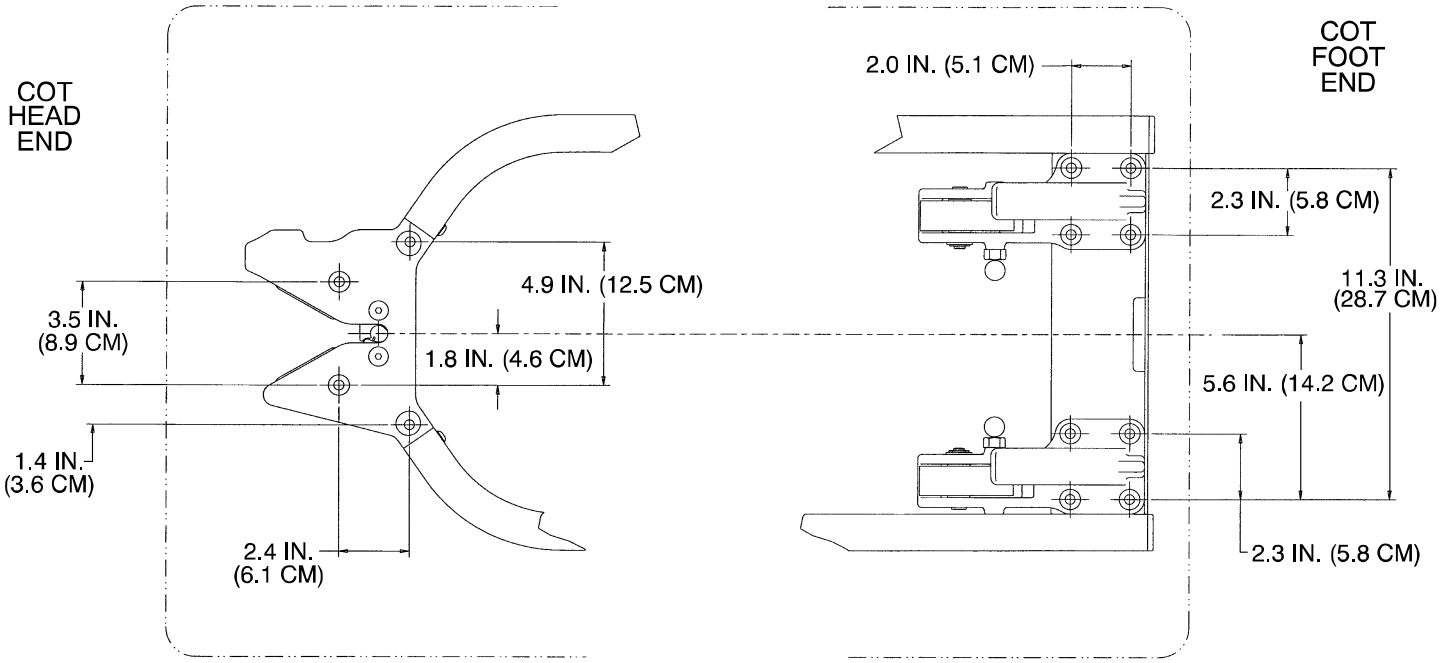

VIEW 2B

Base Unit Specifications

GENERAL SPECIFICATIONS
6100 Series M1 Base Unit – part number 6100–003–000

Length	77.4 inches (196.6 centimeters)
Width	22.0 inches (55.9 centimeters)
Height[1] – Position 1 Position 2 Position 3 Position 4 Position 5 Position 6 Position 7 Position 8	14.4 inches (36.6 centimeters) 24.4 inches (62.0 centimeters) 30.0 inches (76.2 centimeters) 34.6 inches (87.9 centimeters) 37.6 inches (95.5 centimeters) 39.3 inches (99.8 centimeters) 13.0 inches (33.0 centimeters) N/A
Weight[2]	73.5 pounds (33.3 kilograms)
Maximum Weight Capacity	500 pounds (228 kilograms)
Caster Diameter/Width	6 inches/2 inches (15.2 centimeters/5.1 centimeters
Minimum Operators Required for Loading/Unloading	1
Recommended Cot Fastener Systems	Model 6372 Center Mount, Straight Guide Model 6373 Center Mount DIN Guide
Recommended Floor/Tray Height	27 inches – 31 inches (68.6 centimeters – 78.8 centimeters)

[1] Height measured from bottom of mattress at seat section to ground level.

[2] Standard base unit is weighed without optional accessories.

Stryker reserves the right to change specifications without notice.

The M1 Roll–In System is designed to conform to BS EN 1865, specifications for stretchers and other patient handling equipment used in road ambulances and BS EN 1789 medical vehicles and their equipment – road ambulances.

Base Component Identification

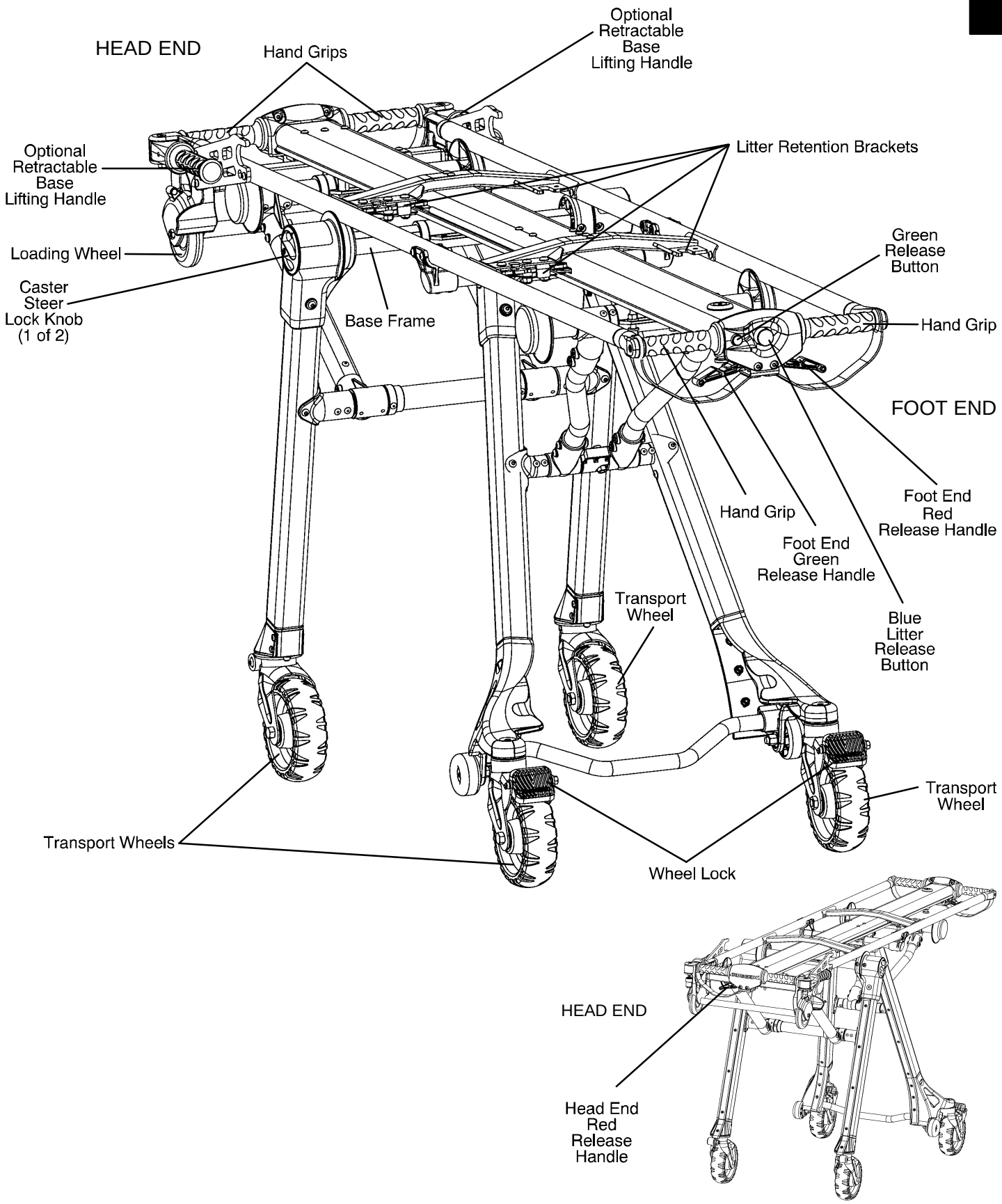

Cot Operation

Guidelines for Operation

- Use the RUGGED™ Cot only as described in this manual.
- Read and understand all labels and instructions on the cot before using the cot.
- Do not adjust, roll or load the cot without advising the patient. Stay with the patient and control the cot at all times.
- Always use all the restraint straps and keep the siderails up (optional equipment) when a patient is on the cot.
- Use properly trained helpers when necessary to control the cot and the patient. Do not allow untrained helpers to assist in the operation of the cot.

CHANGING COT HEIGHT

The RUGGED™ Cot has six height positions (see page 1–16):

- The highest or “Loading” position,
- four intermediate patient transfer positions,
- a “Folded” position for ambulance transport.

⚠ WARNING

The caster steer lock knob and the casters must be in the locked position when loading/unloading the cot from a vehicle or loading tray system and when the cot height is changed or the cot may become unstable possibly resulting in injury to the patient or operator.

The higher the operator must lift the cot, the more difficult it becomes to hold the weight. The operator may need help loading the cot into a vehicle if he/she is too short or if the patient is too heavy for the operator to lift safely. If additional assistance is needed, see the reference chart on page 1–19.

The operator must be able to lift the cot high enough for the cot’s base frame to unfold completely and lock when the cot is unloaded. A shorter operator will have to raise his/her arms higher to enable the base frame to unfold. If additional assistance is needed, see the reference chart on page 1–19.

Always verify the base frame is securely locked into position before releasing the hand grips.

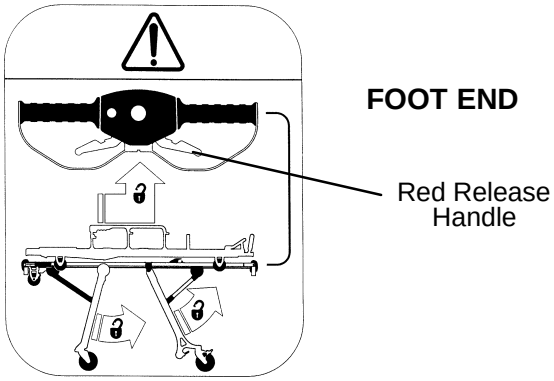

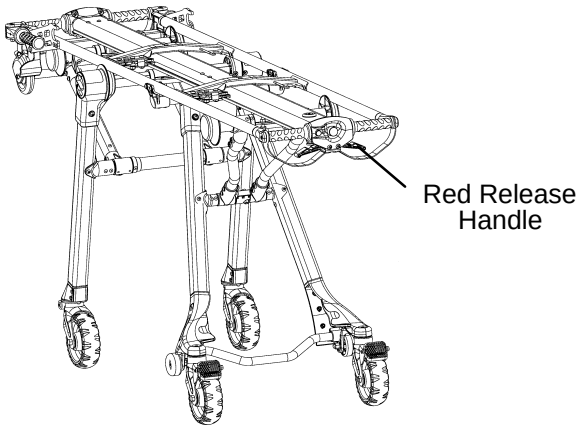

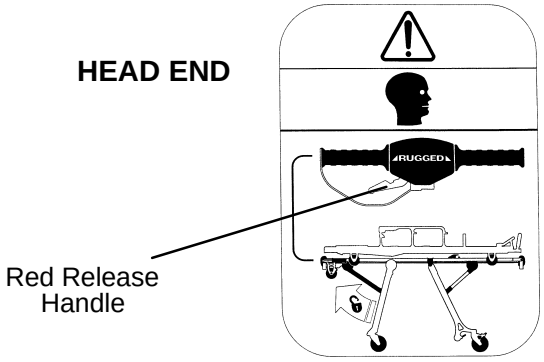

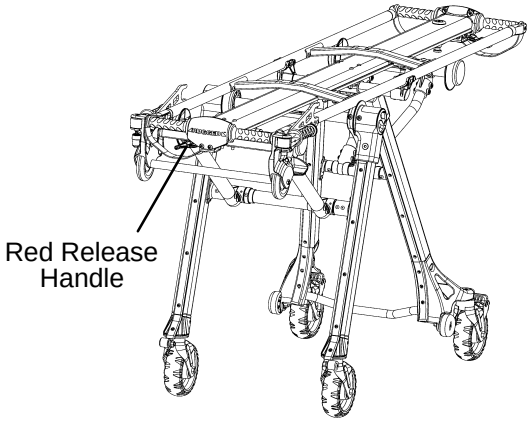

To change the cot height:

Two operators standing at opposite ends of the cot firmly grasp the hand grips on the base unit.

Both operators lift the cot until the weight is off the latching mechanism (approximately 1/4”).

Both operators squeeze and hold the red release handles and raise or lower the cot to the desired height.

As motion of the cot begins, each operator relaxes his/her grip *on the release handle* to stop the cot in the next available height position.

NOTE
Always communicate with your partner to ensure you work together to achieve the intended operation.

An operator working alone can lower the cot by releasing alternating ends of the cot.

Cot Positions

English

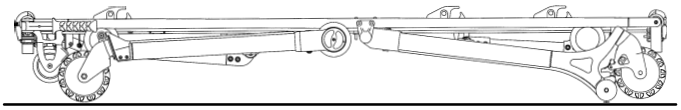

Position 1 – Intermediate Height Position
Use for patient transfer.

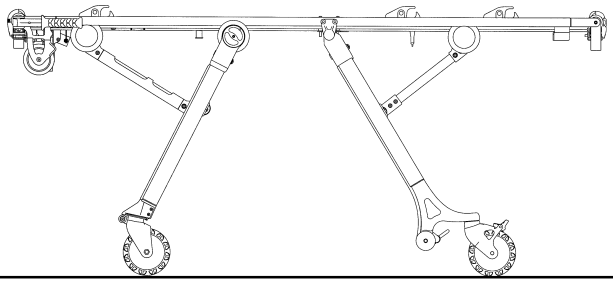

Position 5 – Intermediate Height Position
Use for patient transfer.

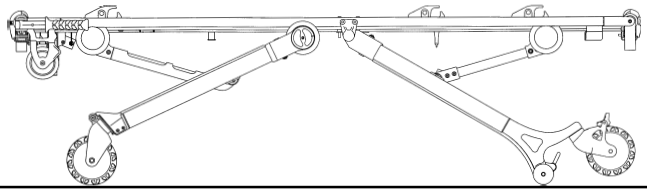

Position 2 – Intermediate Height Position
Use for patient transfer.

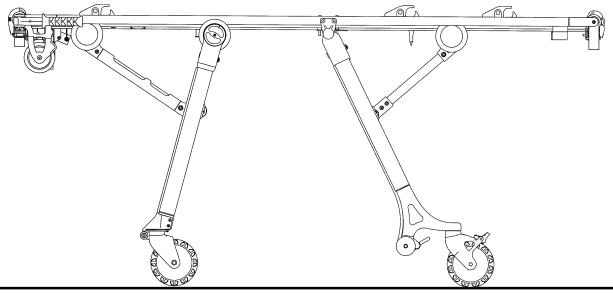

Position 6 – Loading position – Use for patient transfer, folding or loading the cot or cot rolling.

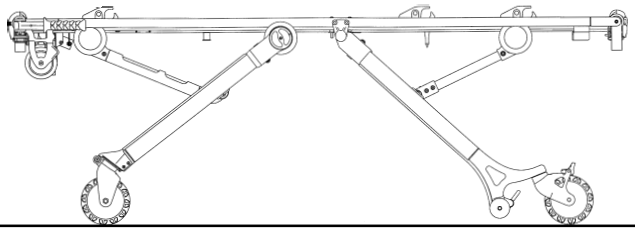

Position 3 – Intermediate Height Position
Use for patient transfer.

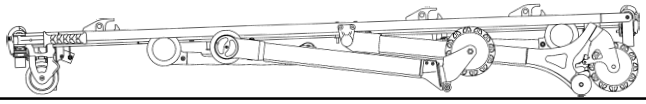

Position 7 – Folded position – Use for transporting in an ambulance.

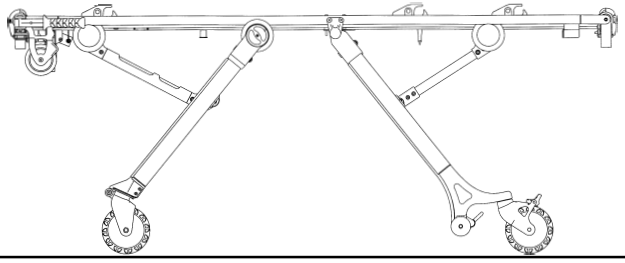

Position 4 – Intermediate Height Position
Use for patient transfer.

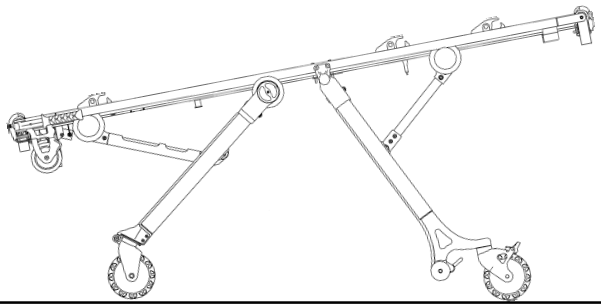

Position 8 – Trendelenburg

Loading the RUGGED™ Cot into a Vehicle

WARNING

The caster steer lock knob and the casters must be in the locked position when loading/unloading the cot from a vehicle or loading tray system and when changing cot height positions or the cot may become unstable possibly resulting in injury to the patient or operator.

Loading, unloading and changing the position of the cot requires a minimum of one trained operator. The operator(s) must be able to lift the total weight of the patient, cot and any other items on the cot. (If additional assistance is needed, see the reference chart on page 1–19).

The higher the operator must lift the cot, the more difficult it becomes to hold the weight. The operator may need help loading the cot into a vehicle if he/she is too short or if the patient is too heavy for the operator to lift safely. If additional assistance is needed, see the reference chart on page 1–19.

The operator must be able to lift the cot high enough for the cot's base frame to unfold completely and lock when the cot is unloaded. A shorter operator will have to raise his/her arms higher to enable the base frame to unfold. If additional assistance is needed, see the reference chart on page 1–19.

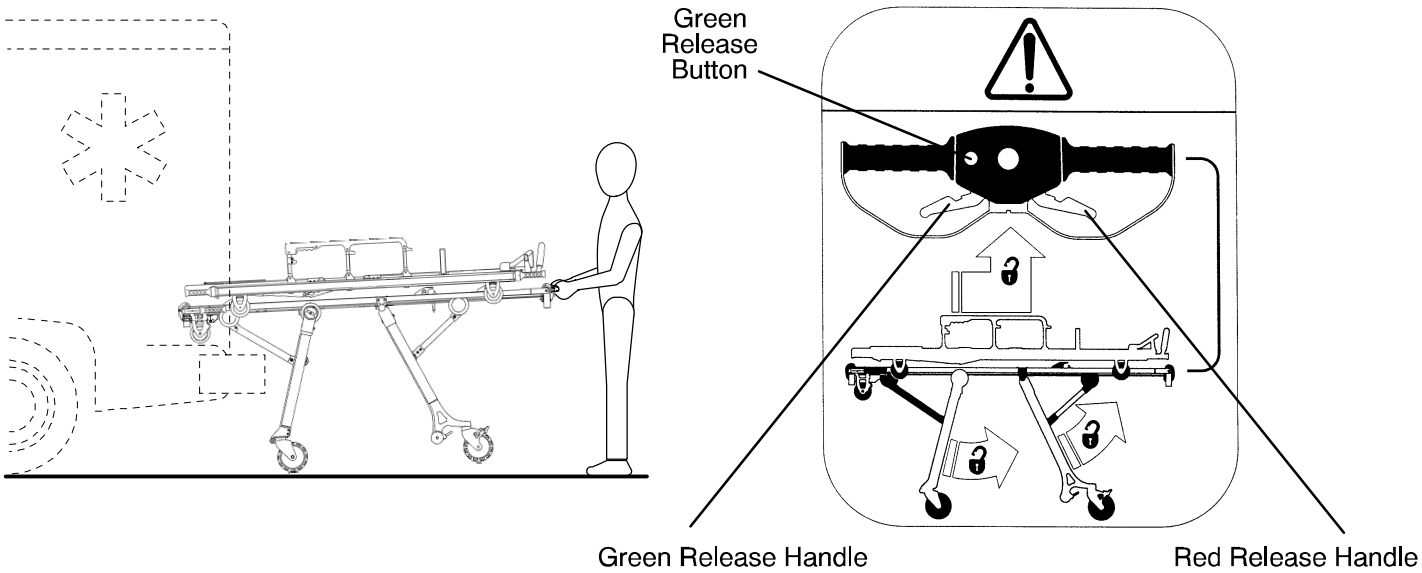

Place the cot in the loading position (see page 1–16). Roll the cot to the vehicle or loading tray system until the cot's loading wheels are in the vehicle or loading tray system. Guide the cot forward until the cot's front legs contact the rear of the vehicle or loading tray system.

At the foot end of the cot, push and hold the green safety release button and squeeze and hold the green release handle.

Guide the cot into the vehicle or loading tray system (the front legs will fold back) until the rear legs come in contact with the vehicle or loading tray system. Relax your grip on the green release handle and green button.

Lift the foot end of the cot slightly to take the weight off the rear wheels. Squeeze and hold the red release handle and guide the cot into the vehicle or loading tray system (the rear legs will fold back) engaging the cot fastener system.

NOTE

Loose items or debris on the patient compartment floor can interfere with the smooth rolling of the cot and the operation of the cot fastener. Keep the patient compartment floor clear.

English

Unloading the Cot from a Vehicle

WARNING

The caster steer lock knob and the casters must be in the locked position when loading/unloading the cot from a vehicle or loading tray system and when changing cot height positions or the cot may become unstable possibly resulting in injury to the patient or operator.

Loading, unloading and changing the position of the cot requires a minimum of one trained operator. The operator(s) must be able to lift the total weight of the patient, cot and any other items on the cot. If additional assistance is needed, see the reference chart on page 1–19.

The higher the operator must lift the cot, the more difficult it becomes to hold the weight. The operator may need help loading the cot into a vehicle if he/she is too short or if the patient is too heavy for the operator to lift safely. If additional assistance is needed, see the reference chart on page 1–19.

The operator must be able to lift the cot high enough for the cot's base frame to unfold completely and lock when the cot is unloaded. A shorter operator will have to raise his/her arms higher to enable the base frame to unfold. If additional assistance is needed, see the reference chart on page 1–19.

Always verify the base frame is securely locked into position before removing the loading wheels from the patient compartment floor of the vehicle or loading tray system. An unlocked base frame will not support the cot and injury to the patient or operator could result.

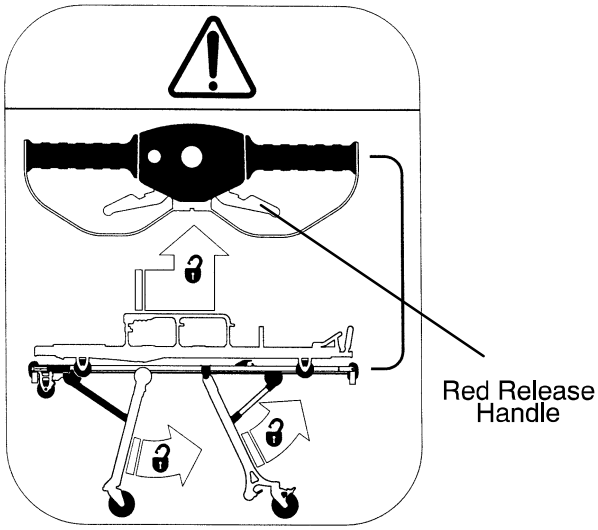

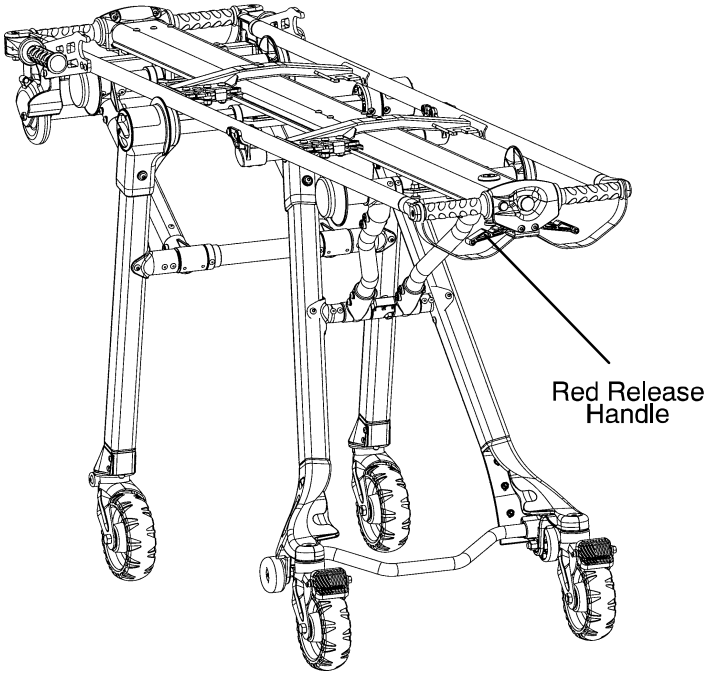

Disengage the cot from the cot fastener system.

Grasp the hand grips at the foot end of the cot base frame securely and squeeze and hold the red release handle. Guide the cot out of the vehicle or loading tray system until the rear legs lower and fully extend.

Release the red release handle when the legs are fully extended.

After verifying the rear legs are securely locked in place, continue to guide the cot out of the vehicle or loading tray system until the front legs of the cot lower and lock into position. It may be necessary to lift the cot slightly to allow the legs to fully extend and lock. After verifying the front legs are securely locked in place, pull the cot away from the ambulance until the loading wheels clear the patient compartment floor.

Using Additional Assistance

	Changing Levels	Rolling	Loading/Unloading
Two Operators Two Helpers	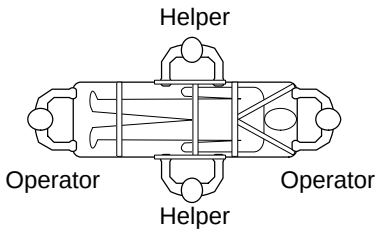	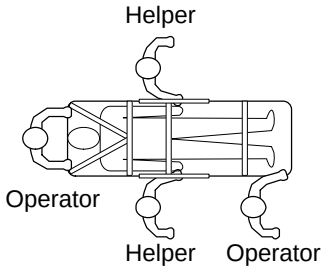	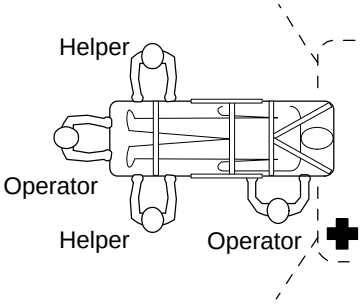
Two Operators Four Helpers	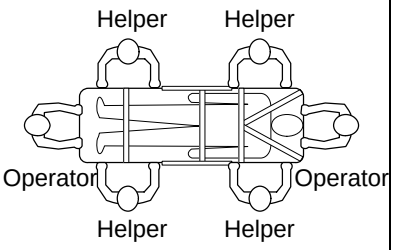	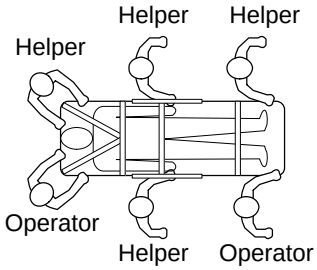	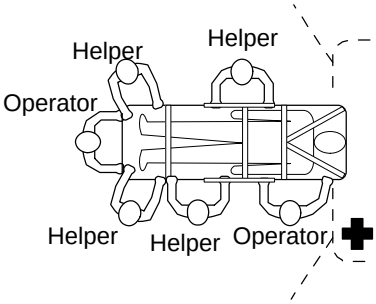

English

Caster Steer Lock

The caster steer lock feature allows the front set of caster wheels to swivel freely to enhance cot mobility.

WARNING

The caster steer lock knob and the casters must be in the locked position when loading/unloading the cot from a vehicle or loading tray system and when changing cot height positions or the cot may become unstable possibly resulting in injury to the patient or operator.

To disengage the caster steer lock feature and allow the front casters to swivel freely, rotate the red locking knob on either side of the front legs to the unlocked position. After the locking knob is rotated to the unlocked position, push the cot in the desired direction. The casters will swivel freely.

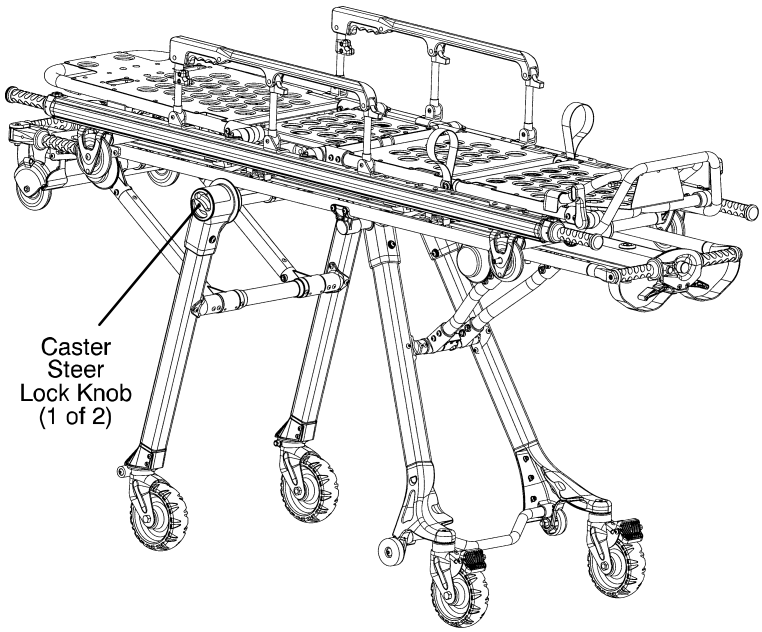

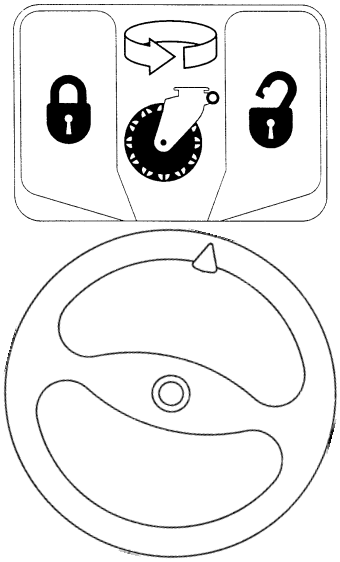

UNLOCKED

To engage the caster steer lock feature and prevent the front casters from swiveling freely, rotate the red locking knob on either side of the front legs to the locked position. Push the cot forward. The casters will swivel and align in the proper position and the swivel lock will engage.

NOTE

The caster steer lock feature can be engaged or disengaged from either side of the base frame.

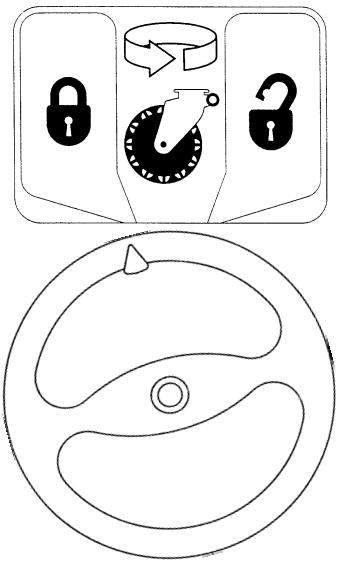

LOCKED

Connecting the Litter to the Base

To attach the removable litter to the base, lower the litter onto the base. Align the roller guides on the litter with the center base tube and push the litter forward to engage the litter retention brackets. Always verify the litter is locked securely onto the base before releasing your grip on the litter.

To disconnect the litter from the base, push and hold the blue litter release button at the foot end of the base. Pull the litter toward the foot end to disengage it from the retention brackets. Lift the litter off the base.

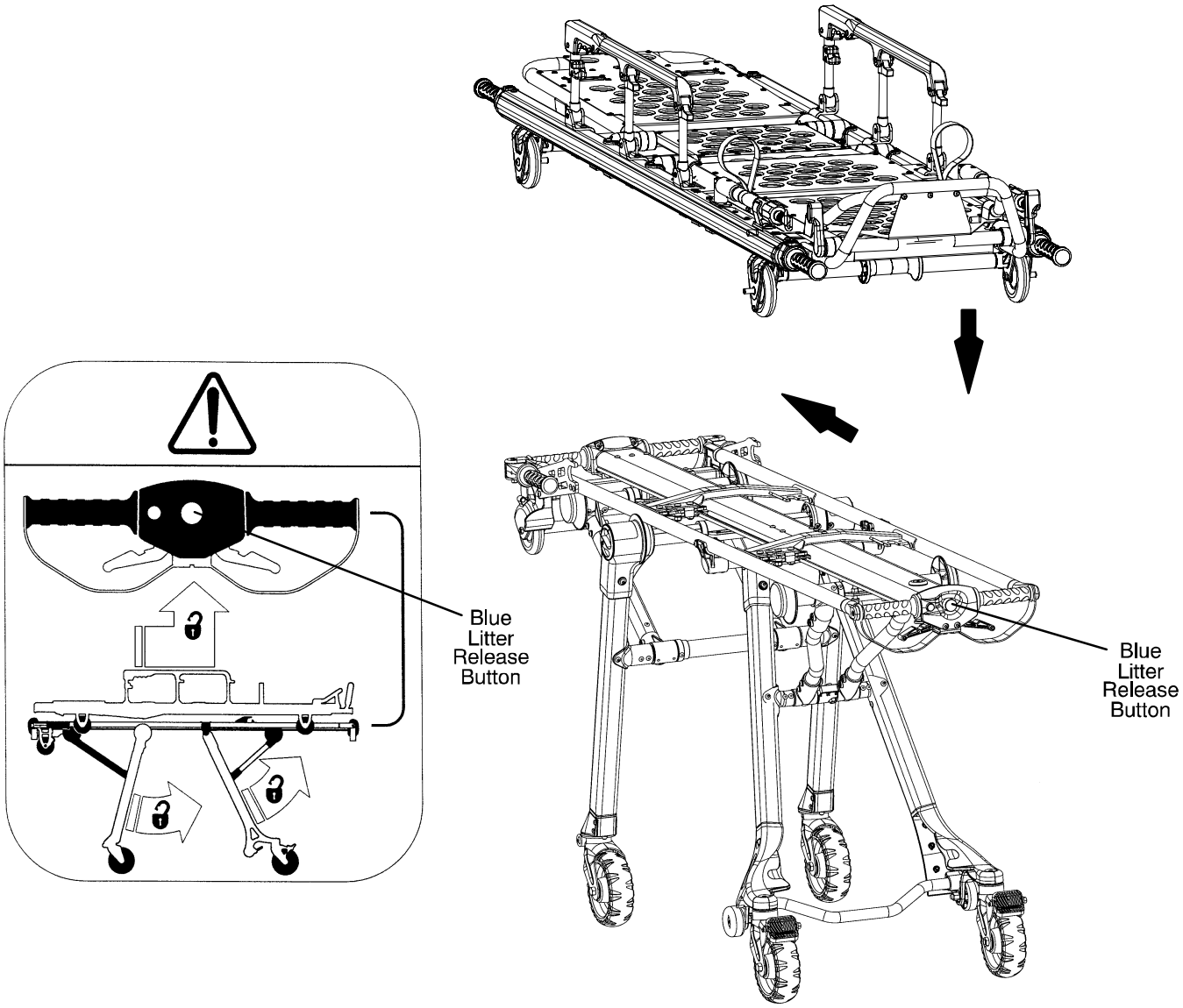

NOTE

The Model 6100–31 Knee Gatch Litter and the Model 6100–33 Flat Foot Section Litter can be attached in either direction.

English

Wheel Lock

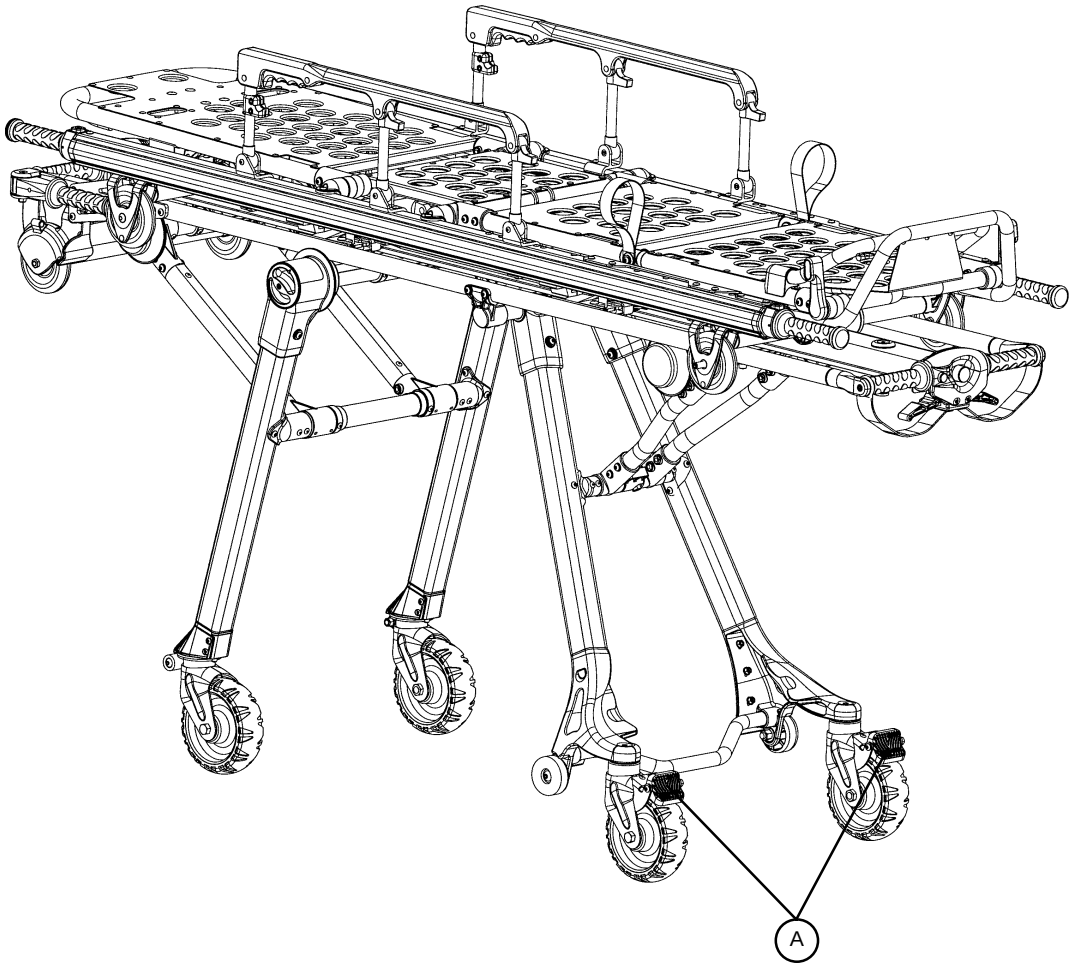

To activate the wheel lock, press fully down on the pedal (A) until it stops.

To release the wheel lock, depress the upper face of the wheel lock pedal with your foot or lift up with your toe under the pedal. The upper portion of the pedal will rest against the caster frame when the wheel lock is released.

WARNING

The wheel lock is only intended to help prevent the cot from rolling while unattended. The wheel lock may not provide sufficient resistance on all surfaces or under loads.

Never apply the wheel lock while a patient is on the cot. Tipping could occur if the cot is moved while the wheel lock is applied, resulting in injury to the patient or operator and/or damage to the cot.

Never leave a patient unattended on the cot or injury could result. Hold the cot securely while a patient is on the cot.

Base Head End Retractable Lifting Handles (Optional Equipment)

WARNING

The caster steer lock knob and the casters must be in the locked position when loading/unloading the cot from a vehicle or loading tray system and when changing cot height positions or the cot may become unstable possibly resulting in injury to the patient or operator.

The higher the operator must lift the cot, the more difficult it becomes to hold the weight. The operator may need help loading the cot into a vehicle if he/she is too short or if the patient is too heavy for the operator to lift safely. (If additional assistance is needed, see the reference chart on page 1–19).

The operator must be able to lift the cot high enough for the cot's base frame to unfold completely and lock when the cot is unloaded. A shorter operator will have to raise his/her arms higher to enable the base frame to unfold. (If additional assistance is needed, see the reference chart on page 1–19).

Always verify the base frame is securely locked into position before relaxing your hold on the hand grips.

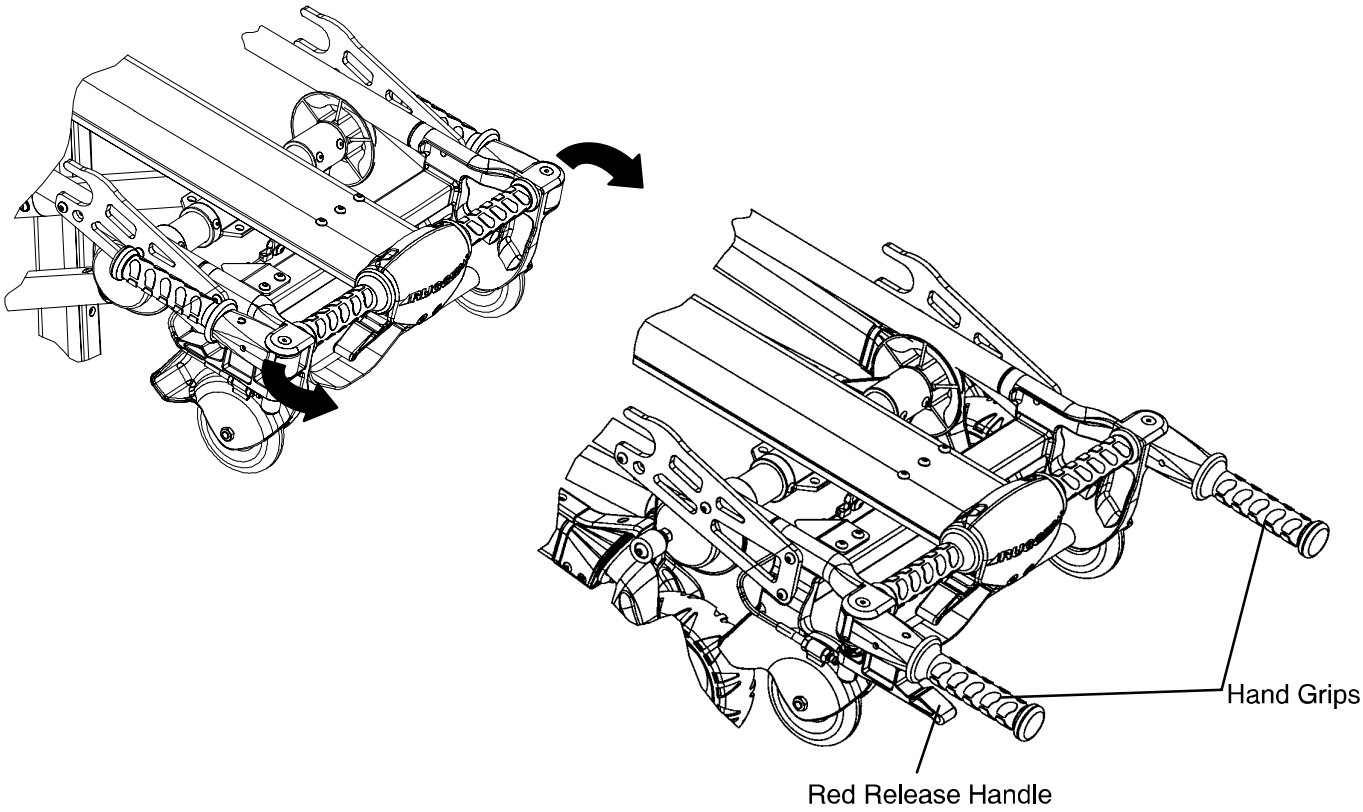

Pivot the handles into place.

To change cot height, two operators firmly grasp the hand grips at opposite ends of the base unit.

Both operators lift the cot until the weight is off the latching mechanism (approximately 1/4").

Both operators squeeze and hold the red release handles and both operators raise or lower the cot to the desired height.

As motion of the cot begins, the operators relax his/her grip *on the release handle* to stop the cot in the next available height position.

NOTE
Always communicate with your partner to ensure you work together to achieve the intended operation.

Litter Specifications and Components

GENERAL SPECIFICATIONS
6100 Series M1 Knee Gatch Litter – part number 6100–031–000

Length	74.9 inches (190.2 centimeters)
Width	22.0 inches (55.9 centimeters)
Height[1]	7.3 inches (18.5 centimeters)
Weight[2]	48.5 pounds (22.0 kilograms)
Maximum Weight Capacity	500 pounds (228 kilograms)
Wheel Diameter/Width	4.0 inches/.8 inches (10.2 centemeters/2.0 centimeters)
Backrest Articulation	0° to 75°
Shock Position	+17°
Knee Gatch Position	30°
Handle Extension	7.75 inches (19.7 centimeters)

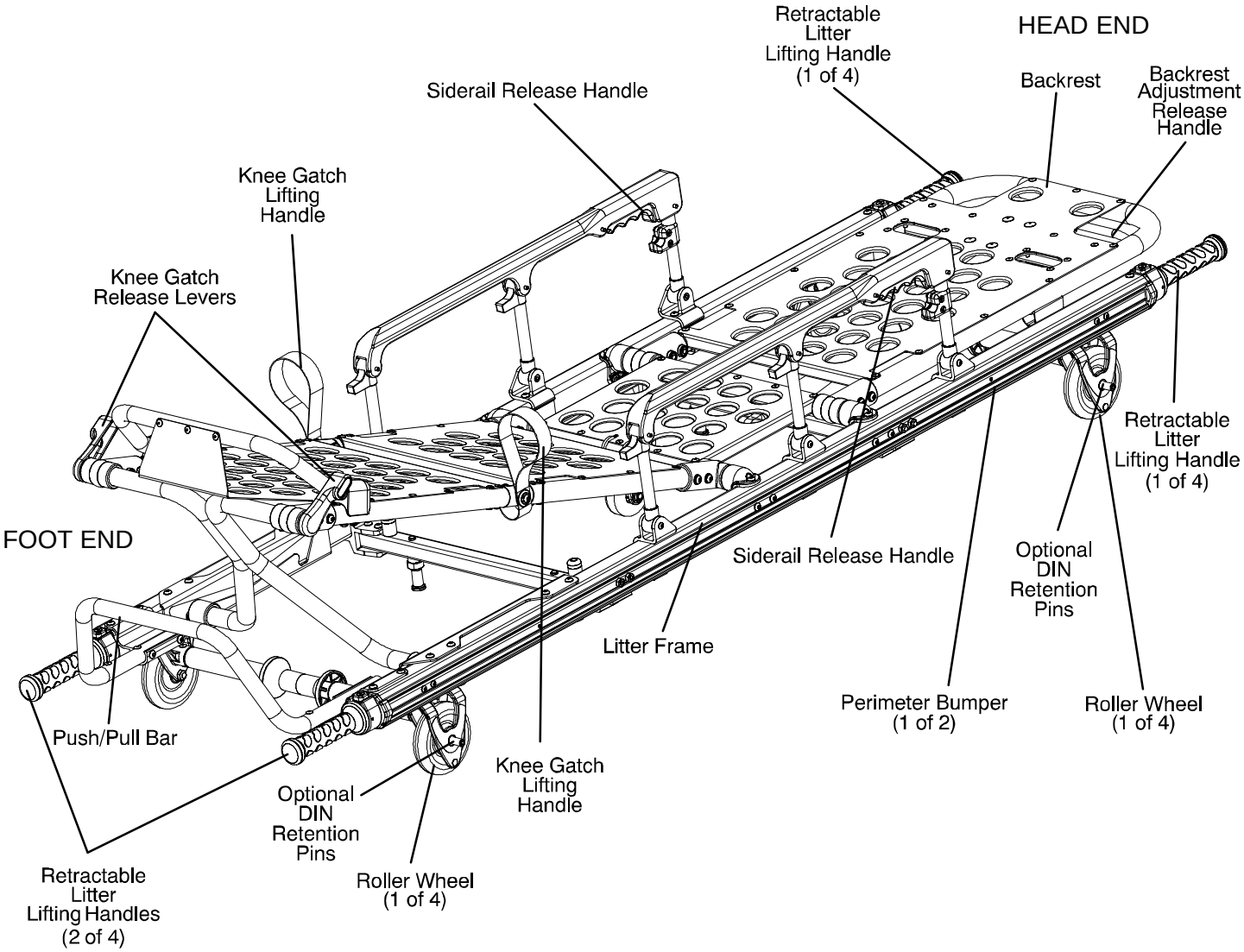

GENERAL SPECIFICATIONS
6100 Series M1 Flat Foot Section Litter – part number 6100–033–000

Length	74.9 inches (190.2 centimeters)
Width	22.0 inches (55.9 centimeters)
Height[1]	7.3 inches (18.5 centimeters)
Weight[2]	43.5 pounds (19.7 kilograms)
Maximum Weight Capacity	500 pounds (228 kilograms)
Wheel Diameter/Width	4.0 inches/.8 inches (10.2 centemeters/2.0 centimeters)
Backrest Articulation	0° to 75°
Handle Extension	7.75 inches (19.7 centimeters)

[1] Height measured from bottom of mattress at seat section to ground level.
[2] Litter is weighed without optional accessories.
Stryker reserves the right to change specifications without notice.
The M1 Roll–In System is designed to conform to BS EN 1865, specifications for stretchers and other patient handling equipment used in road ambulances and BS EN 1789 medical vehicles and their equipment – road ambulances.

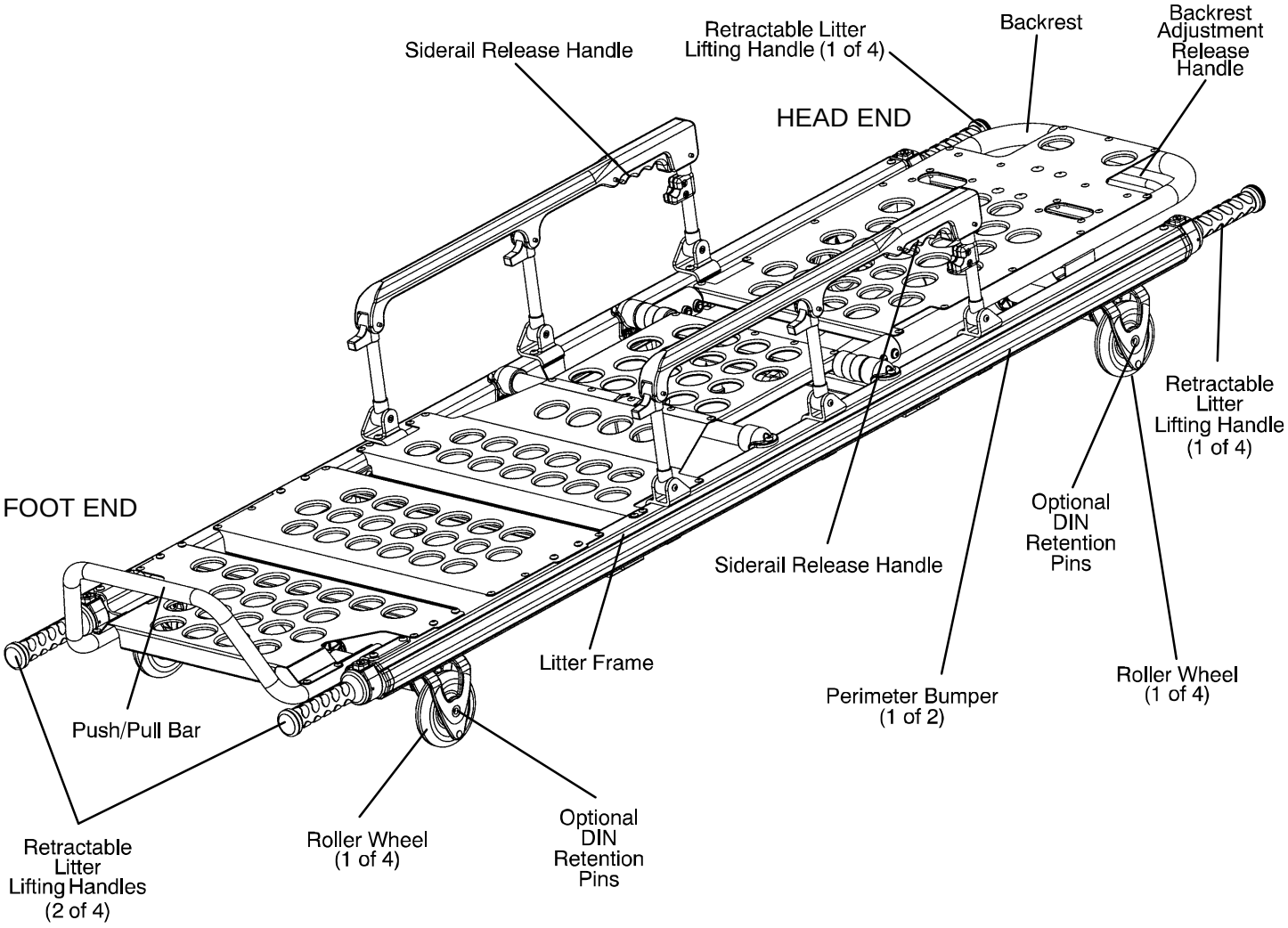

Cot Operation

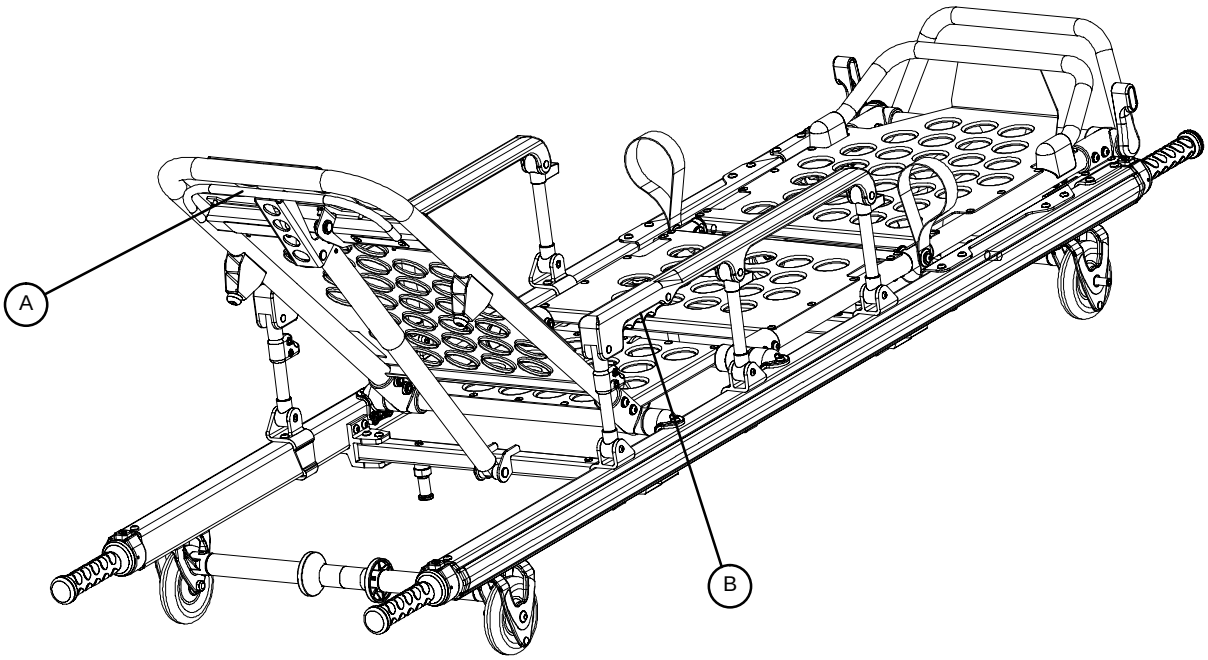

HEAD END

Backrest

To raise, squeeze handle (A) for pneumatic assist in lifting the Backrest to the desired height. Remove hand(s) from handle when desired height is achieved.

To lower, squeeze handle (A) and push down on the Backrest frame until the Backrest has reached the desired height. Remove hand(s) from handle when desired height is achieved.

Siderails (Optional Equipment)

To raise, lift up until the latch clicks and the siderail locks into place. When a patient is on the cot, always keep the siderails in the raised position unless the patient is being transferred.

To lower, squeeze handle (B) to release the siderail latch. Guide the siderail down toward the foot end until flat.

Knee Gatch

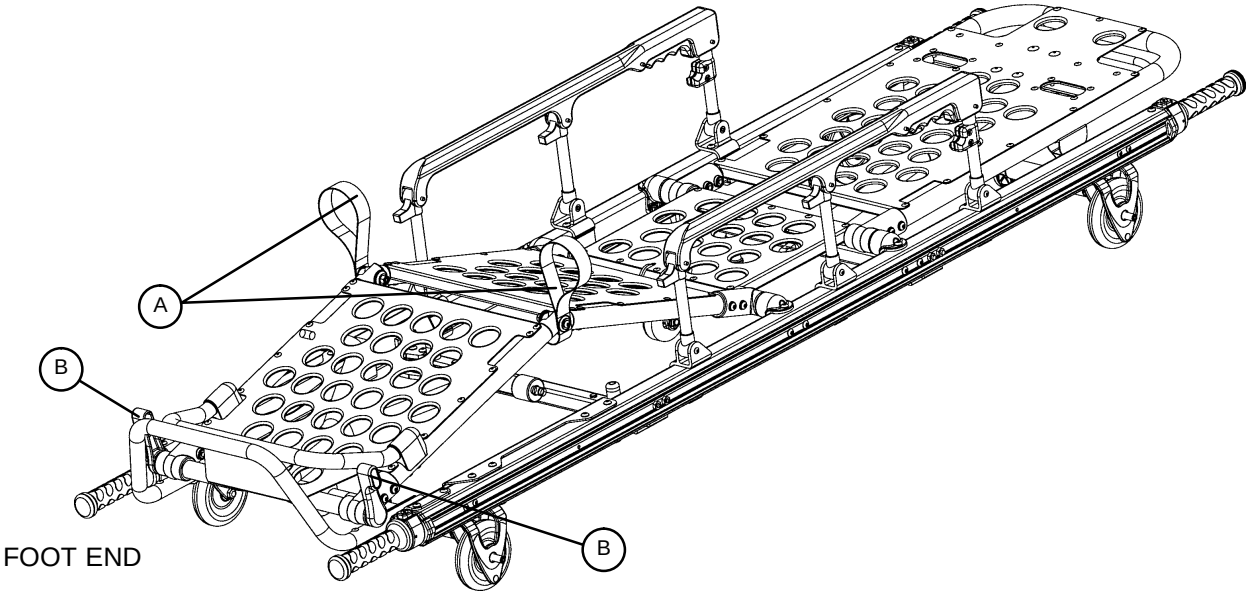

To raise the Knee Gatch into position, grasp one of the red lift straps (A) and lift the Knee Gatch until it locks into position.

⚠ WARNING

Verify the Knee Gatch is securely locked into position before releasing your grip on the lift strap or injury could occur.

To lower the Knee Gatch, grasp one of the red lift straps (A), lift the Knee Gatch slightly, push the red lever (B) toward the foot end of the cot and lower the Gatch.

English

Trendelenburg Positioning

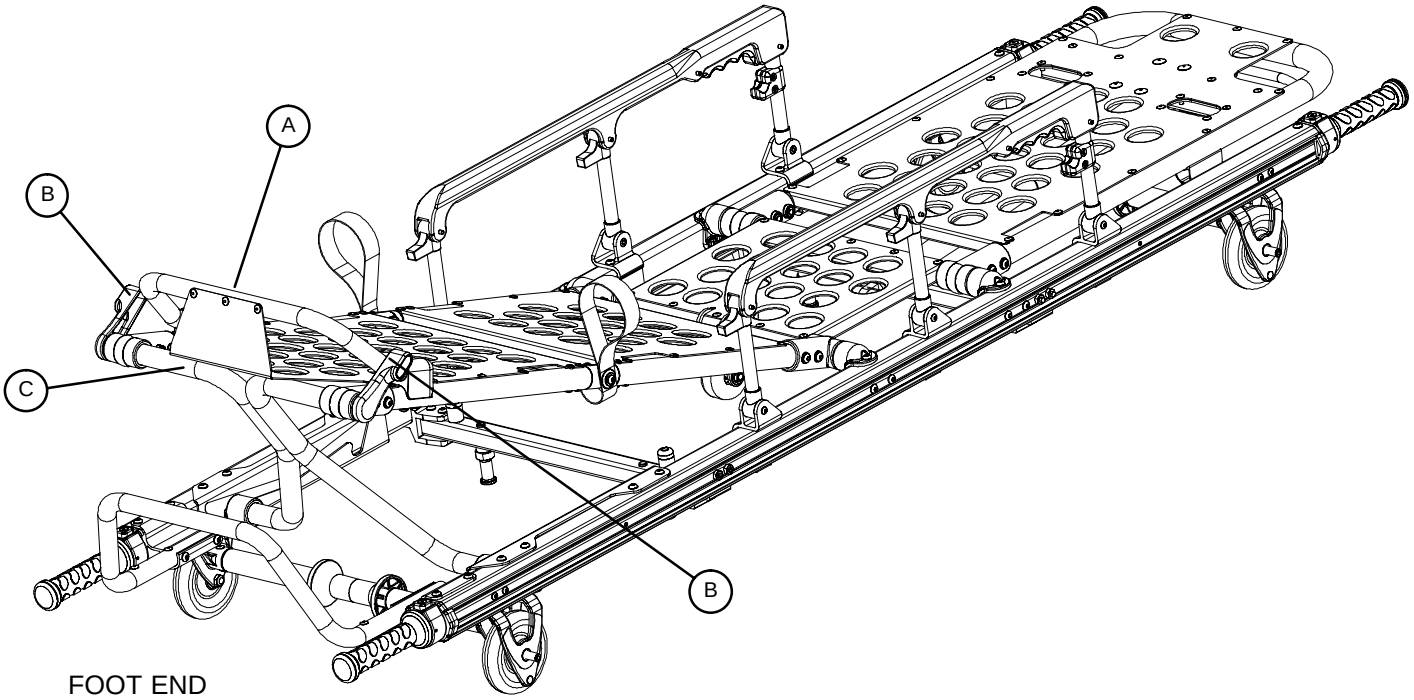

To raise the leg rest, lift the leg rest frame (A) as high as possible. The support bracket (C) will engage automatically. Release the frame after the support bracket has engaged.

⚠ **WARNING**

Verify the foot section is securely locked into position before releasing your grip on the leg rest frame or injury could occur.

To lower the leg rest, lift the leg rest frame (A) and, while holding the frame, push the red release lever (B) toward the foot end of the cot and lower the frame to its flat position.

Retractable Lifting Handles

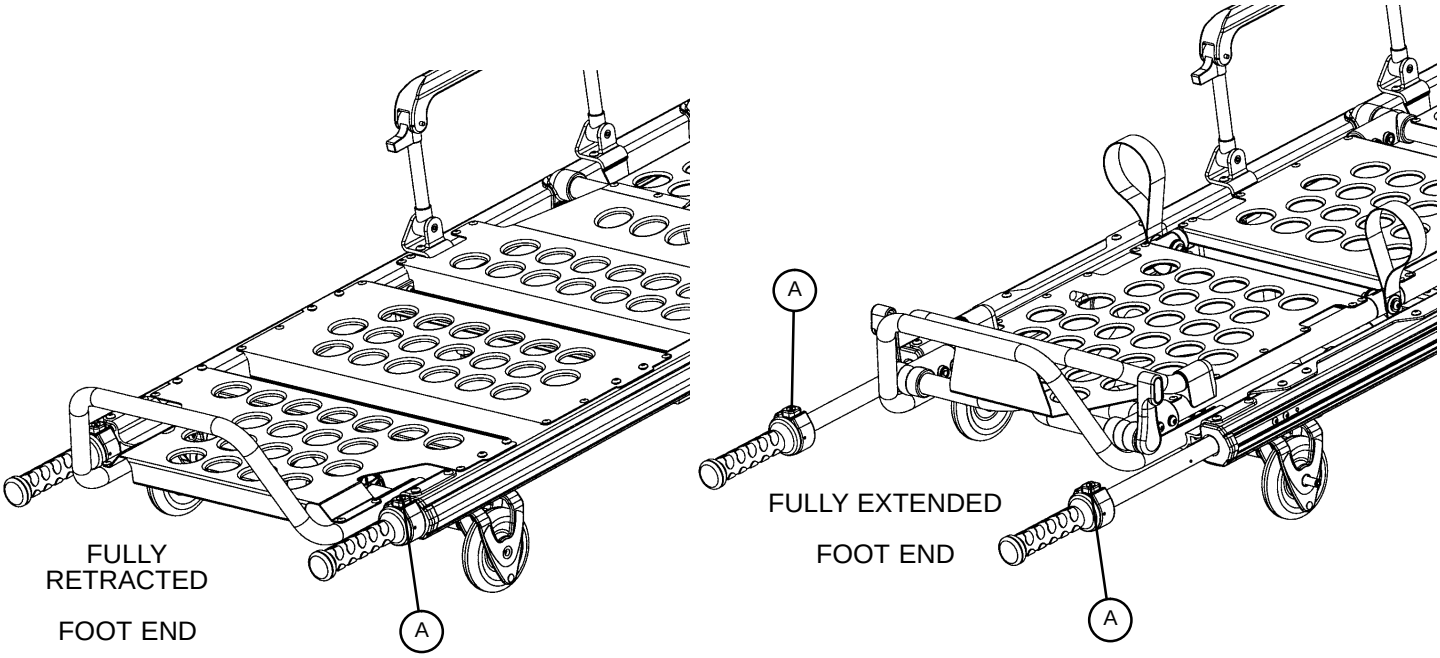

To extend the retractable lift handles, push the release buttons (A) and pull out the handles. Release the buttons when the handles lock into the intermediate position. Push the buttons and pull out the handles again to reach the fully extended position.

⚠ **WARNING**

To avoid injury to the patient or operator, verify the lifting handles are securely locked into place before lifting the cot.

To retract the lift handles, push the release button and push in the handle. Release the button when the handle locks into the intermediate position. Push the button and push in the handle again to reach the fully retracted position.

English

3–Stage I.V. Pole (Optional Equipment)

1. Lift and pivot the pole from the storage position and push down until it is locked into receptacle (A).

2. To raise the height of the pole, turn the lock actuator (B) counter-clockwise and pull up on the bottom telescoping portion (C) of the pole to raise it to the desired height.

3. Turn the lock actuator (B) clockwise to lock the bottom telescoping portion in place.

4. For a higher I.V. pole, pull up on section (D) until the spring clip (E) engages.

5. Hang I.V. bags on the I.V. hook (F).

⚠ CAUTION

The weight of the I.V. bags should not exceed 40 pounds.

6. To lower the I.V. pole, push in on the spring clip (E) and slide section (D) down into section (C). Turn the lock actuator (B) counterclockwise and slide section (C) into the bottom tube.

7. Lift up and pivot the pole down into the storage position.

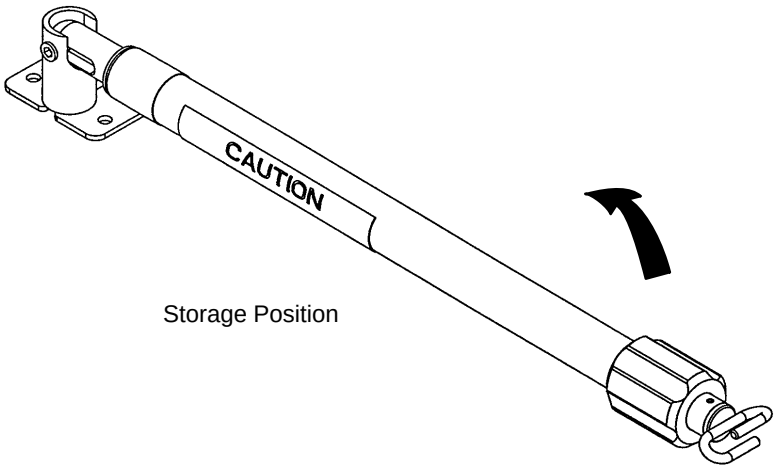

Storage Position

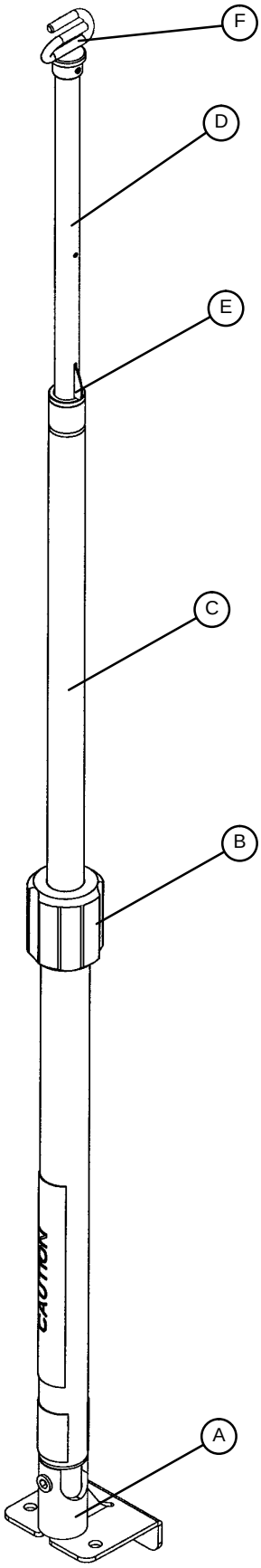

Transferring the Patient to the RUGGED™ Cot

Roll the cot to the patient.

Place the cot beside the patient and raise/lower the cot to the patient's level. Lower the siderails (optional equipment) and open the restraint straps.

Transfer the patient to the cot using accepted EMS procedures.

Use all the restraints to secure the patient to the cot (see pages 1–32 & 1–33 for restraint strap usage instructions). Raise the siderails (optional equipment) and adjust the backrest and leg rest as necessary.

⚠ **WARNING**

Always use all restraint straps to secure the patient on the cot. An unrestrained patient may fall from the cot resulting in injury.

English

Restraint Straps

⚠ WARNING

Always use all restraint straps to secure the patient on the cot. An unrestrained patient may fall from the cot resulting in injury.

Always secure the patient on the cot with all the restraint straps. Securely buckle the restraints across the patient's chest/shoulders, waist and legs.

When attaching the restraint straps to the cot, remember the attachment points should provide strong anchorage and proper restraint positioning while not interfering with equipment and accessories. Wrap the strap around the cot frame and back through the loop on the end of the strap as shown in the illustration.

⚠ CAUTION

To avoid damage to the buckles and straps, keep the restraint straps buckled when the cot is not being used with a patient.

In addition to the alternate attachment points indicated by the arrows, the restraint straps can be attached anywhere on the litter frame tube.

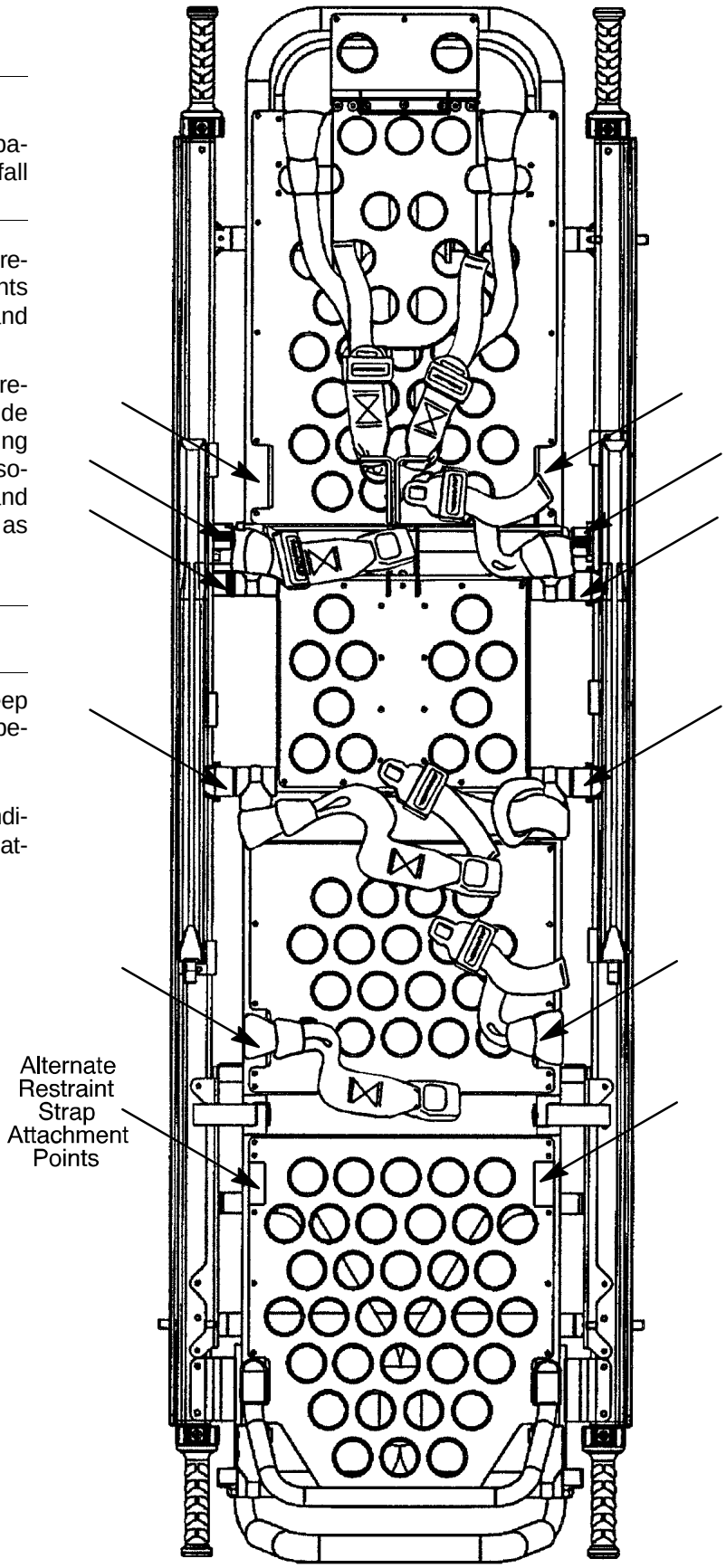

Restraint Straps (Continued)

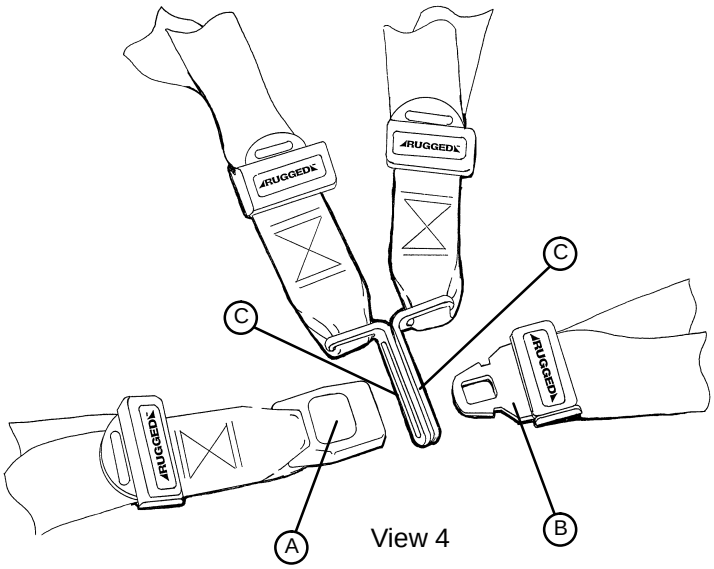

View 4

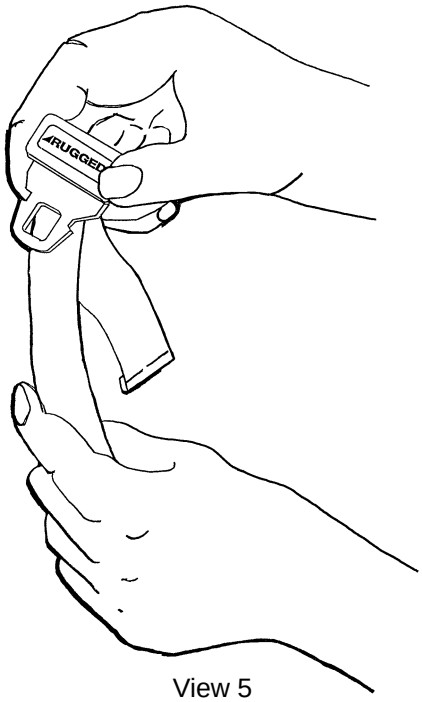

View 5

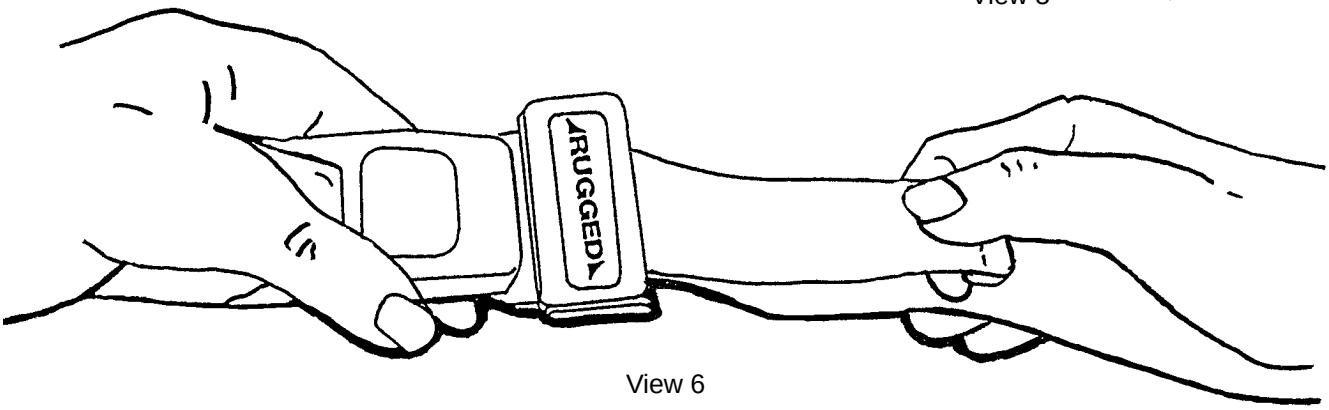

View 6

When the cot is put into service, the restraints are opened and placed to either side of the cot until the patient is positioned on the cot mattress. The restraint is lengthened, buckled around the patient and shortened until the required tightness is achieved.

To open the restraint, press the red button (A) on the front of the buckle ”receiver”. This releases the buckle ”tang” (B) which can then be pulled out of the receiver (View 4).
To close the restraint, push the tang into the receiver until a ”click” is heard. When fastening the chest restraint be sure the tang passes through both links (C) on the shoulder strap (View 4).

To lengthen the restraint, grasp the buckle tang, turn it at an angle to the webbing, then pull out (View 5). A hemmed tab at the end of the webbing prevents the tang from coming off the strap.
To shorten the restraint, grasp the hemmed tab and pull the webbing back through the tang until the required tightness is achieved (View 6) .

Whenever a restraint is buckled on a patient, the attendant should verify the tang is fully engaged and the extra webbing is not tangled in the cot or hanging loose.

Inspection of the restraints should be done at least once a month (more frequently if used heavily). Inspection should include checking for a bent or broken receiver or tang, torn or frayed webbing, etc. Any restraint showing wear or not operating properly must be replaced immediately.

English

Rolling the RUGGED™ Cot

WARNING

High obstacles such as curbing, steps or rough terrain can cause the cot to tip, possibly causing patient or operator injury. If possible, obtain additional assistance (see page 1–19 for a reference chart) or take an alternate route.

Make sure all the restraint straps are securely buckled around the patient (see pages 1–32 & 1–33 for restraint strap usage instructions). Place the cot in position 5 for rolling (see page 1–16 for cot positions). When rolling the cot, position an operator at the foot end and one at the head end or at the side at all times. (If additional assistance is needed, see the reference chart on page 1–19).

During transport, approach door sills or other low obstacles squarely and lift the front and back set of wheels over the obstacle separately.

CLEANING

The Model 6100 cot is designed to be power–washable. The unit may show some signs of oxidation or discoloration from continuous washing. However, no degradation of the cot's performance characteristics or functionality will occur due to power washing as long as the proper procedures are followed.

Washing Procedure:

- Follow the cleaning solution manufacturer's dilution recommendations exactly.
- Remove the mattress prior to washing the unit; do not wash the mattress with the cot.
- The preferred method Stryker Medical recommends for power washing cots is with the standard hospital surgical cart washer or hand held wand unit.
- Do not replace the mattress on the cot until the unit is completely dry.
- When the washing procedure is complete, position the backrest at 45°, place the unit in full reverse Trendelenburg (foot down), raise the siderails, and place the I.V. poles in the up position to allow any excess water to drain properly (see illustration).

Washing Limitations:

DO NOT STEAM CLEAN OR ULTRASONICALLY CLEAN THE UNIT.

Maximum water temperature of 180°F/68°C.

Maximum air dry temperature (cart washers) is 240°F/115°C.

Maximum water pressure – 1500 psi/130.5 bar. If a hand held wand is being used to wash the unit, the pressure nozzle must be kept a minimum of 24 inches/61 centimeters from the unit.

Failure to comply with these instructions may invalidate any/all warranties.

CLEANING (CONTINUED)

In general, when used in those concentrations recommended by the manufacturer, either phenolic type or quaternary type disinfectants can be used. Iodophor type disinfectants are not recommended for use because staining may result. The following products have been tested and have been found not to have a harmful effect WHEN USED IN ACCORDANCE WITH MANUFACTURERS RECOMMENDED DILUTION.*

TRADE NAME	DISINFECTANT TYPE	MANUFACTURER	*MANUFACTURER'S RECOMMENDED DILUTION
A33	Quaternary	Airwick (Professional Products Division)	2 ounces/gallon
A33 (dry)	Quaternary	Airwick (Professional Products Division)	1/2 ounce/gallon
Beaucoup	Phenolic	Huntington Laboratories	1 ounce/gallon
Blue Chip	Quaternary	S.C. Johnson	2 ounces/gallon
Elimstaph	Quaternary	Walter G. Legge	1 ounce/gallon
Franklin Phenomysan F2500	Phenolic	Purex Corporation	1 1/4 ounce/gallon
Franklin Sentinel	Quaternary	Purex Corporation	2 ounces/gallon
Galahad	Phenolic	Puritan Churchill Chemical Company	1 ounce/gallon
Hi–Tor	Quaternary	Huntington Laboratories	1/2 ounce/gallon
LPH	Phenolic	Vestal Laboratories	1/2 ounce/gallon
Matar	Phenolic	Huntington Laboratories	1/2 ounce/gallon
Omega	Quaternary	Airwick (Professional Products Division)	1/2 ounce/gallon
Quanto	Quaternary	Huntington Laboratories	1 ounce/gallon
Sanikleen	Quaternary	West Chemical Products	2 ounces/ gallon
Sanimaster II	Quaternary	Service Master	1 ounce/gallon
Vesphene	Phenolic	Vestal Laboratories	1 1/4 ounce/ gallon

Quaternary Germicidal Disinfectants, used as directed, and/or Chlorine Bleach products, typically 5.25% Sodium Hypochlorite in **dilutions ranging between 1 part bleach to 100 parts water, and 2 parts bleach to 100 parts water are not considered mild detergents.** These products are corrosive in nature and may cause damage to your fastener if used improperly. If these types of products are used to clean Stryker equipment, measures must be taken to insure the units are rinsed with clean water and thoroughly dried following cleaning. Failure to properly rinse and dry the units will leave a corrosive residue on the surface of the unit, possibly causing premature corrosion of critical components.

NOTE
Failure to follow the above directions when using these types of cleaners may void this product's warranty.

PREVENTATIVE MAINTENANCE SCHEDULE

Operation	Schedule	Procedure
Cleaning & Disinfecting	Each use.	See pages 1–35 and 1–36.
Inspection	For 1–25 calls per month, inspect cot every 6 months. For 26–200 calls per month, inspect cot every 3 months. For 201+ calls per month, inspect cot monthly.	See next page for checklist.

Parts, Service or Technical Assistance:

Contact Stryker Customer Service at 1–800–327–0770 or

Stryker Medical
6300 Sprinkle Road
Kalamazoo, MI 49001
ATTN.: Customer Service

English

CHECKLIST

Litter

_____ All fasteners secure
_____ All welds intact, not cracked or broken
_____ No bent or broken components
_____ Perimeter bumpers intact
_____ Roller wheels rotate smoothly, no debris around axles
_____ Backrest operating properly (see page 1–45 for backrest adjustment procedure)
_____ Extension lift handles operating properly (4 total)
_____ Siderails operating properly (optional equipment)
_____ Knee Gatch/Trendelenburg operating properly (optional equipment)
_____ Litter retention pins secure and not bent or broken (4 total)
_____ Litter locks securely to base unit, roller guides not bent or broken
_____ Optional accessories intact and operating properly

Litter Serial No. _____ Model No. _____

Completed By:_____ Date:_____

Mattress

_____ No rips, cracks or punctures in mattress cover
_____ Mattress attaches to litter properly

Restraint System

_____ Buckle and tensioner systems operating properly
_____ No frayed or torn straps
_____ No loose or torn stitching

Base

_____ All fasteners secure
_____ All welds intact, not cracked or broken
_____ No bent or broken components
_____ Plastic wear strips intact (front/rear leg assemblies)
_____ Load wheels rotate smoothly, no debris around axles
_____ All wheels secure, rolling and swivelling properly, no debris in axles
_____ Caster steer lock system operating properly (see page 1–41 for detent force adjustment procedure)
_____ Wheel locks operating properly (see page 1–40 for pedal locking force adjustment procedure)

CHECKLIST (CONTINUED)

Base (Continued)

_____ Undercarriage loads and unloads properly from the vehicle
_____ Green release lever and button intact and operating properly
_____ Undercarriage is secure and operates properly in all height positions
_____ Red release levers intact and operating properly (both ends)
_____ Litter locks securely onto base unit; litter release mechanism operating properly
_____ Base retention pin secure and not bent or broken
_____ Extendable lift handles intact and operating properly
_____ Optional accessories intact and operating properly
_____ Base locks securely into cot fastener system

Base Serial No. _____ Model No. _____

Completed By:_____ Date:_____

English

WHEEL LOCKING FORCE ADJUSTMENT

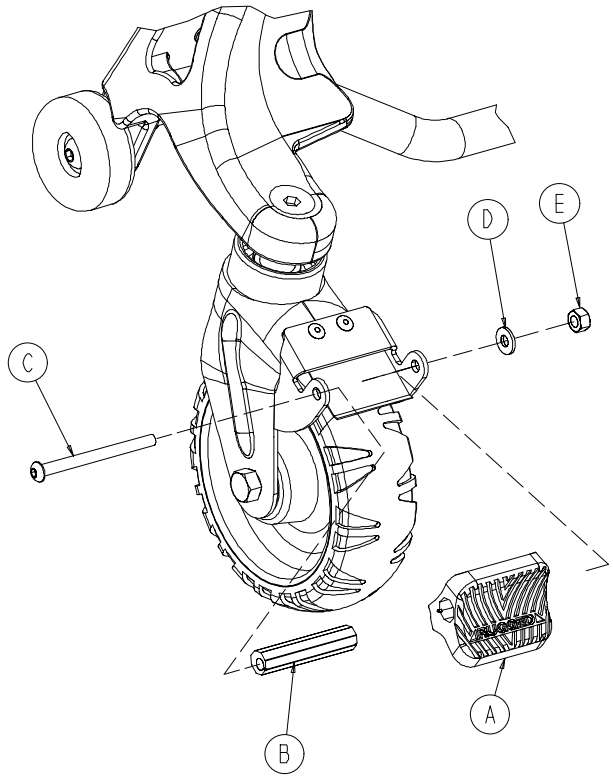

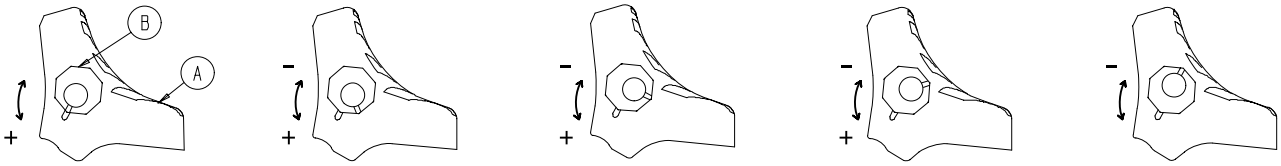

MINIMUM MAXIMUM

1. To adjust the wheel locking force, remove the button head cap screw (item C), washer (item D) and hex nut (item E) from the center of the lock pedal. The wheel lock is initially assembled with the pedal set at the minimum locking force. The marker on the pedal (item A) is aligned with the marker on the octagonal sleeve (item B).
2. Remove the sleeve (item B). Rotate the sleeve counterclockwise to increase the pedal locking force and clockwise to decrease the locking force. Insert the sleeve into the pedal. Reinstall the hex socket screw.
3. Test the pedal locking force before returning the cot to service.

STEER LOCK DETENT FORCE ADJUSTMENT

Required Tools:

Flat Blade Screwdriver 5/32” Allen Wrench 1/4” Allen Wrench

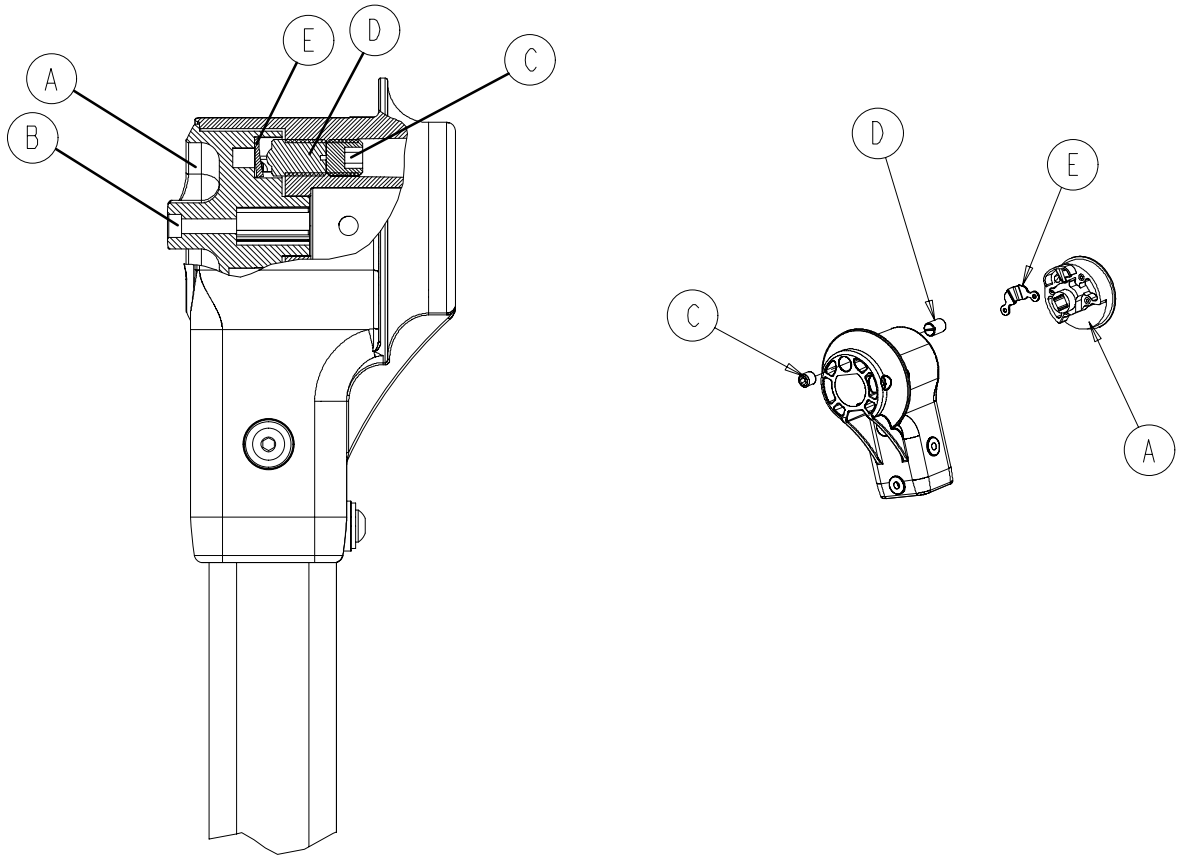

Adjustment Procedure:

1. Rotate the steer lock knob (item A) to the locked position (see page 1–20). Ensure both casters are in the locked position and the steer lock pin is free of debris.
2. Using a 5/32” Allen wrench, verify item B is tight on both sides. If it is not, tighten it securely.
3. Using a 1/4” Allen wrench, remove the set screw (item C) on both sides.
4. Using a flat blade screwdriver, rotate the detent (item D) on both sides counterclockwise until no detent force is felt.
5. Using a flat blade screwdriver rotate the detent (item D) clockwise, alternating from side to side, 1 turn at a time, until resistance is felt against the detent plate (item E).

⚠ CAUTION

Do not overtighten the detent. Damage to the detent plate could occur.

6. Using a flat blade screwdriver, rotate the detent (item D) counterclockwise 2 1/2–3 turns on each side.
7. Verify the steer lock system is operating properly. Additional adjustment may be required. Rotate the detent (item D) 1/2 turn clockwise for more detent force or 1/2 turn counterclockwise for less detent force.
8. Using a 1/4” Allen wrench, install the set screw (item C) and tighten against the detent (item D) on both sides.

English

BASE WEAR STRIP REPLACEMENT

Front Strut Wear Tubes

Required Tools:

5/32” Allen Wrench	3/16” Punch	Drill with 1/4” Drill Bit
Pop Rivet Gun	T–25 Torx Wrench	Two Sawhorses
Hammer		

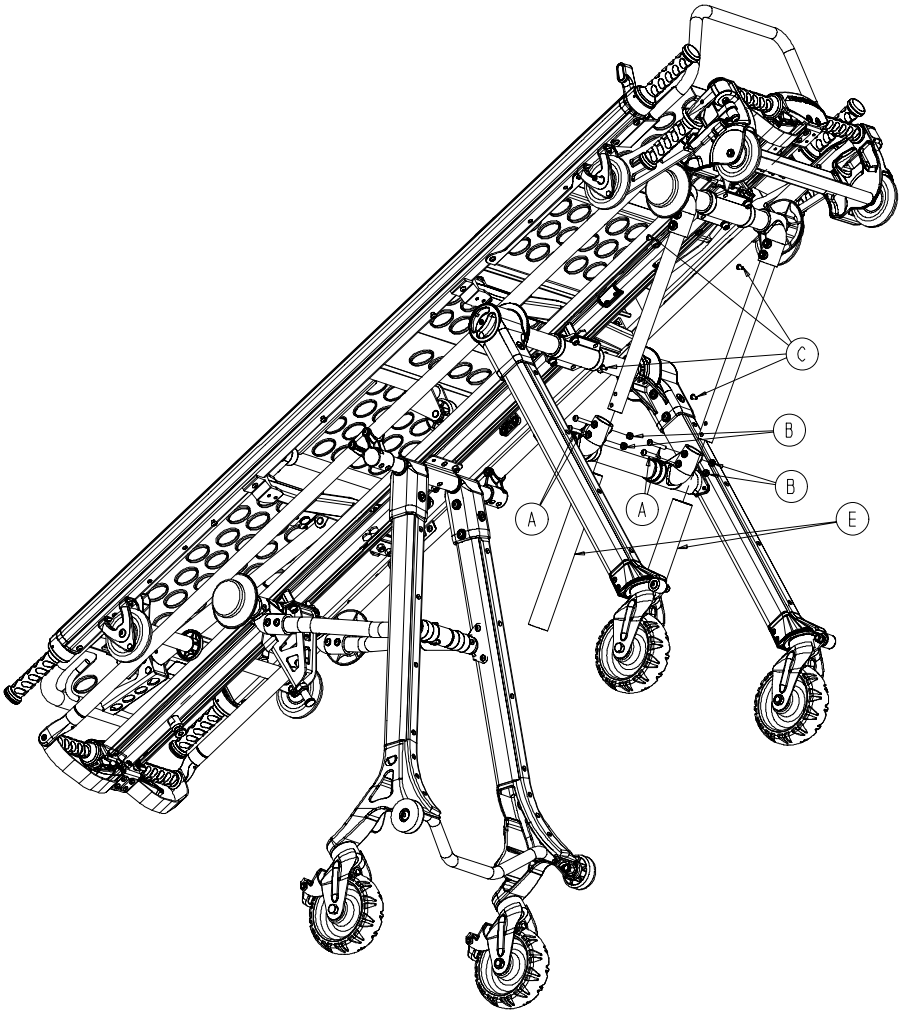

Replacement Procedure:

1. Remove the litter from the base (see page 1–21).
2. Place the base upside down on two sawhorses.
3. Using a 5/32” Allen wrench, remove the two button head cap screws (item A) and nuts (item B).
4. Using a drill with a 1/4” bit, drill out the heads of the rivets (item C), being careful not to drill into the tube. Using a hammer and a 3/16” punch, drive the rivet body into the tube.
5. Remove and discard the bumper tube (item E). Pop rivet the new bumper tube into place.
6. Repeat the procedure for the other side, if necessary.
7. Reassemble the tubes onto the pivots and secure them with the button head cap screws.

BASE WEAR STRIP REPLACEMENT (CONTINUED)

Front Leg Assembly Wear Strips

Required Tools:

Torx T–25

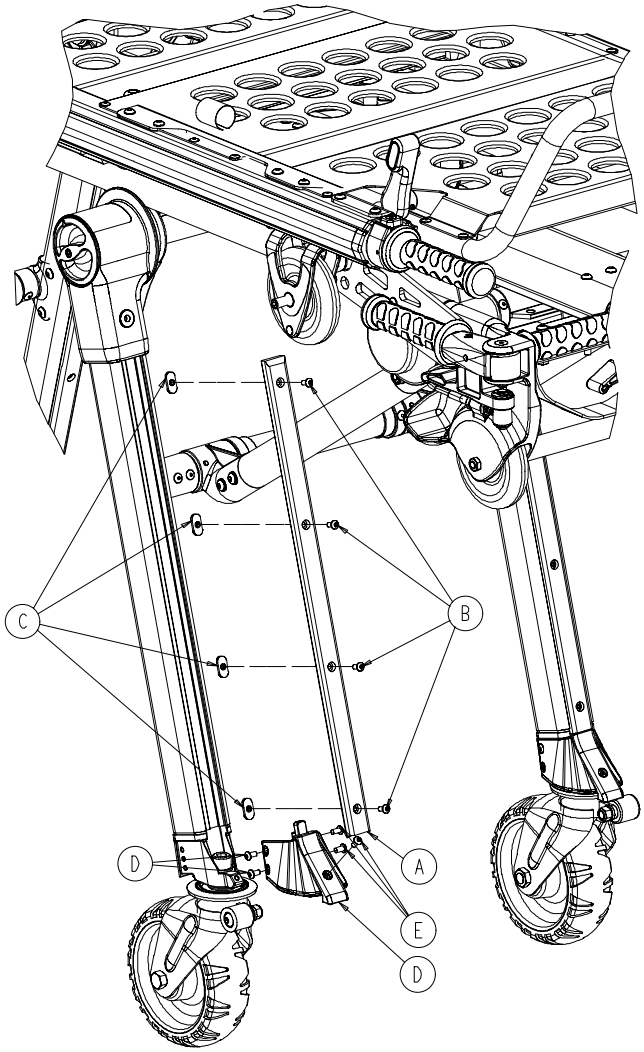

Replacement Procedure:

1. To remove the worn wear strip (item A), use a T–25 Torx wrench to remove the four button head cap screws (item B) and weld nuts (item C). Save the weld nuts and button head cap screws and discard the worn wear strip.
2. To remove the worn bumper cover (item D), use a T–25 Torx wrench to remove the five button head cap screws (item E). Discard the worn bumper cover.
3. Use the five cap screws (item E) removed in step 2 to install the new bumper cover.
4. Assemble the four cap screws (item B) removed in step 1 through the new wear strip. Thread the weld nuts (item C) removed in step 1 onto the cap screws and tighten them 1–2 turns.
5. Place the wear strip on the leg assembly, aligning the weld nuts into the T–slot. Apply pressure to the cap screws and tighten them securely.
6. Repeat the procedure for the other side, if necessary.

English

BASE WEAR STRIP REPLACEMENT (CONTINUED)

Rear Leg Assembly Wear Strips

Required Tools:

Torx T–25 | 1/8” Allen Wrench | 3/8” Open End Wrench

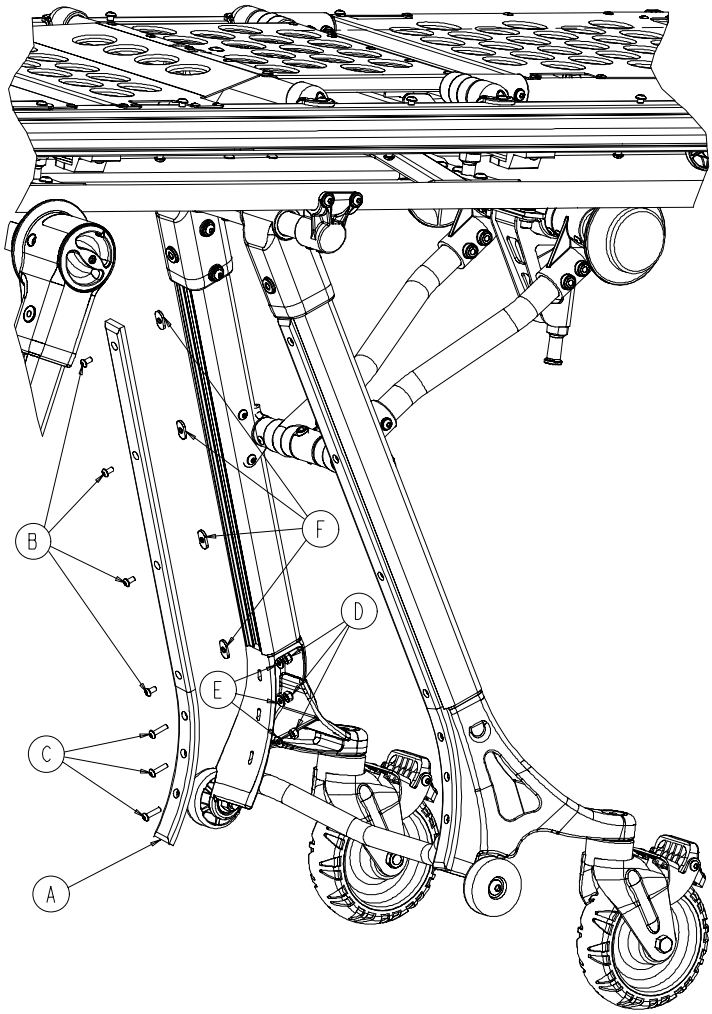

Replacement Procedure:

1. To remove the worn wear strip (item A), use a T–25 Torx wrench to remove the four button head cap screws (item B) and weld nuts (item C). Save the weld nuts and button head cap screws and discard the worn wear strip.
2. Using a 1/8” Allen wrench and 3/8” open end wrench, remove the button head cap screws (item C), nuts (item D) and washers (item E). Discard the worn wear strip. Save the fasteners for reuse.
3. Assemble the cap screws (item C) removed in step 1 through the new wear strip. Thread the weld nuts (item F) onto the cap screws and tighten them 1–2 turns.
4. Align the three lower holes of the wear strip to the leg assembly and attach it with the cap screws (item C), nuts (item D) and washers (item E). Tighten the cap screws securely.
5. Align the weld nuts into the T–slot. Apply pressure to the four cap screws and tighten them securely.
6. Repeat for the other side, if necessary.

PNEUMATIC BACKREST ADJUSTMENT

Required Tools:

3/32” Allen Wrench | Locktite | Needle Nose Pliers

Adjustment Procedure:

1. For easier access, move the backrest to 75 degrees.
2. Using a 3/32” Allen wrench, remove the two set screws (item A) at the top of the pneumatic cylinder.
3. Allow the cylinder shroud (item B) to drop down on the cylinder.
4. Using needle nose pliers, remove the clip ring (item C), pin (item D) and spacers (item F) at the bottom of the cylinder.
5. Turn the pneumatic cylinder shaft (item G) clockwise or counterclockwise until there is no play between the cylinder and the red release handle (item H).
6. Reverse steps 2–5 to reattach the cylinder to the backrest.
7. Be sure the backrest will travel from flat to at least 75 degrees. If it doesn’t, repeat the procedure, turning the cylinder shaft clockwise approximately 1/2 turn. If the backrest drifts up or down, repeat the procedure, turning the cylinder shaft counterclockwise approximately 1/2 turn. After the backrest is properly adjusted, reassemble the cylinder, using Loctite on the two set screws (item A).

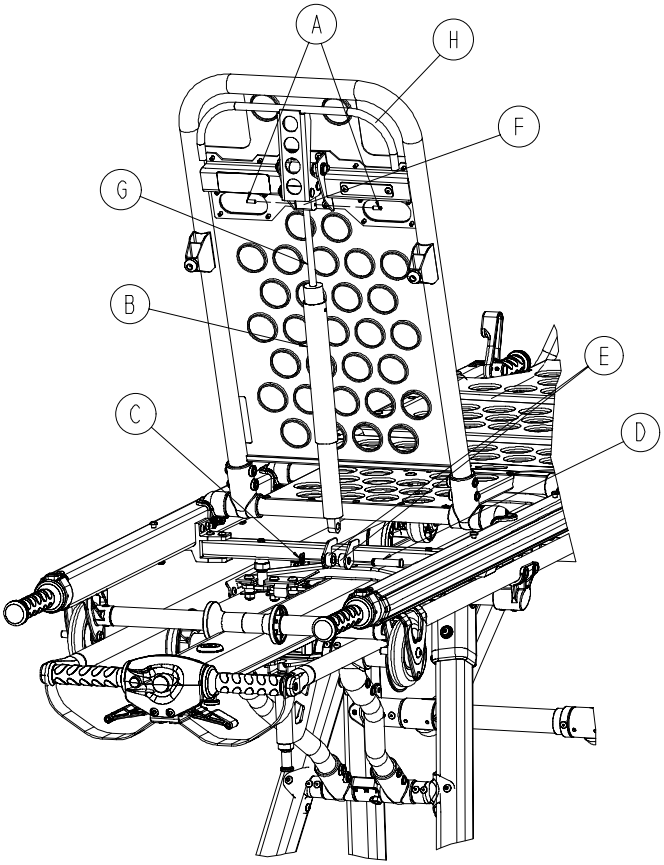

Maintenance Record

Date	Maintenance Operation Performed	By

Training Record

	Training Date		Training Method
Trainee Name	Basic Training	Refresher Update	Owner’s Manual, In–Service, Formal Class, Etc.

Notes

Base Assembly and Options

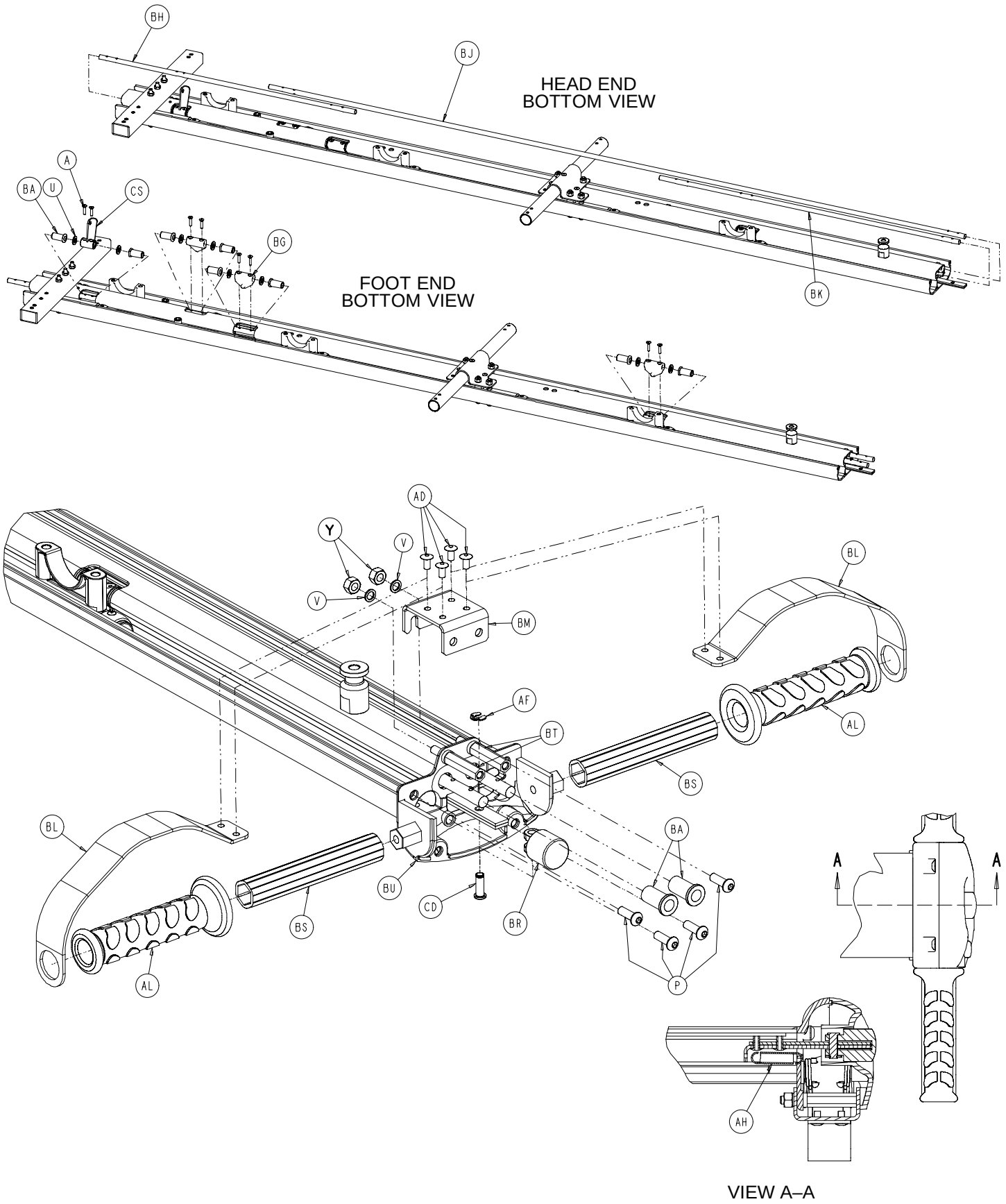

Base Assembly and Options

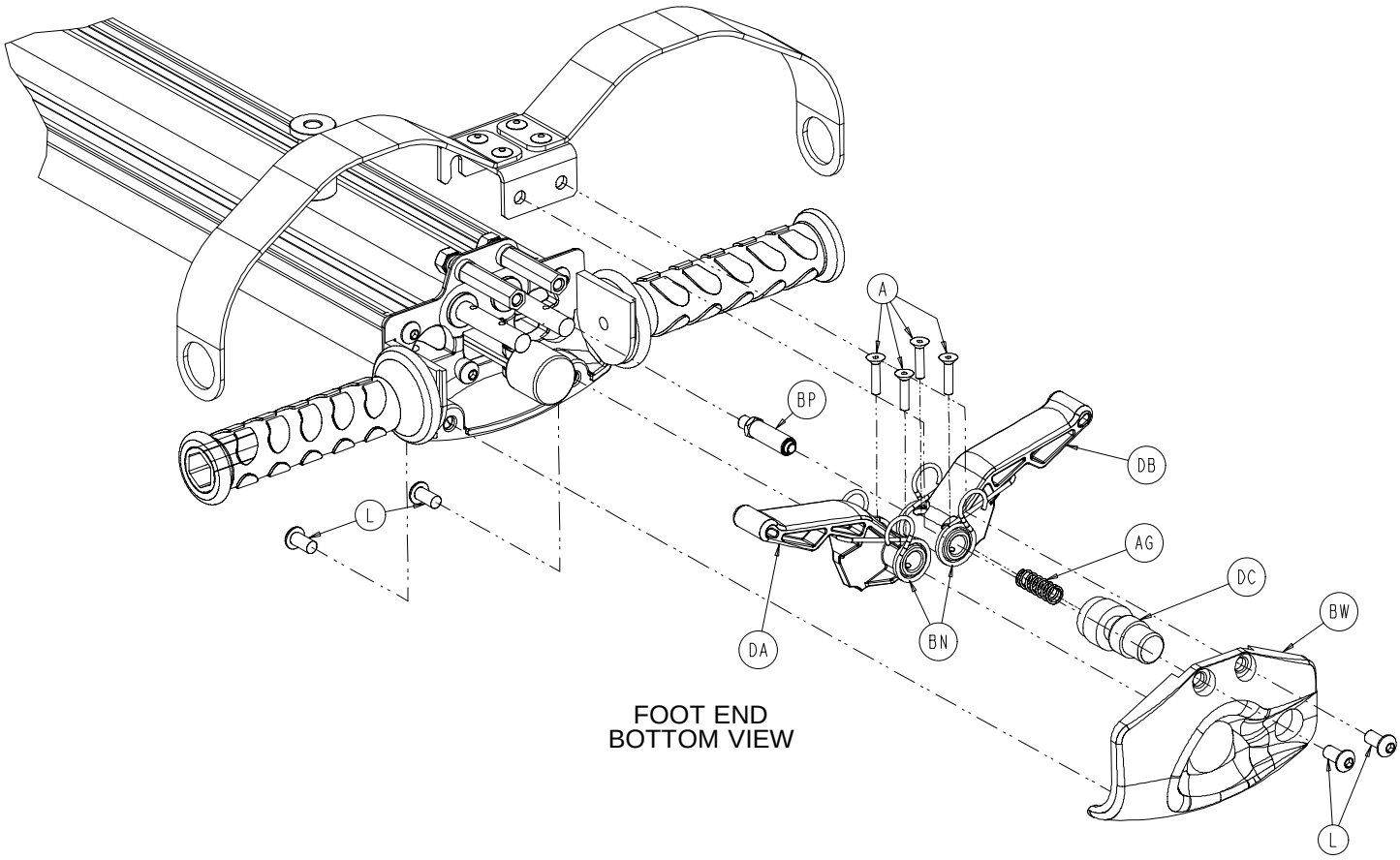

FOOT END
BOTTOM VIEW

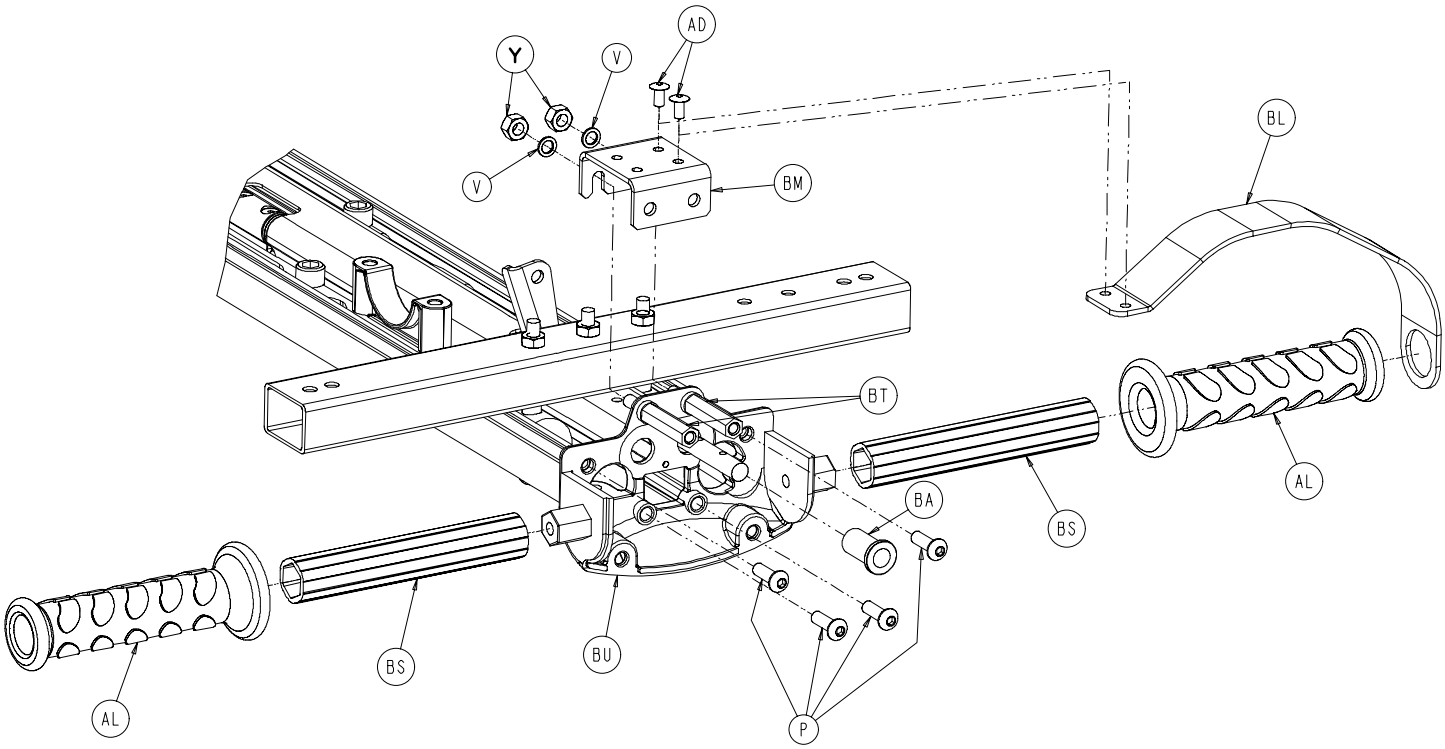

HEAD END
BOTTOM VIEW

Base Assembly and Options

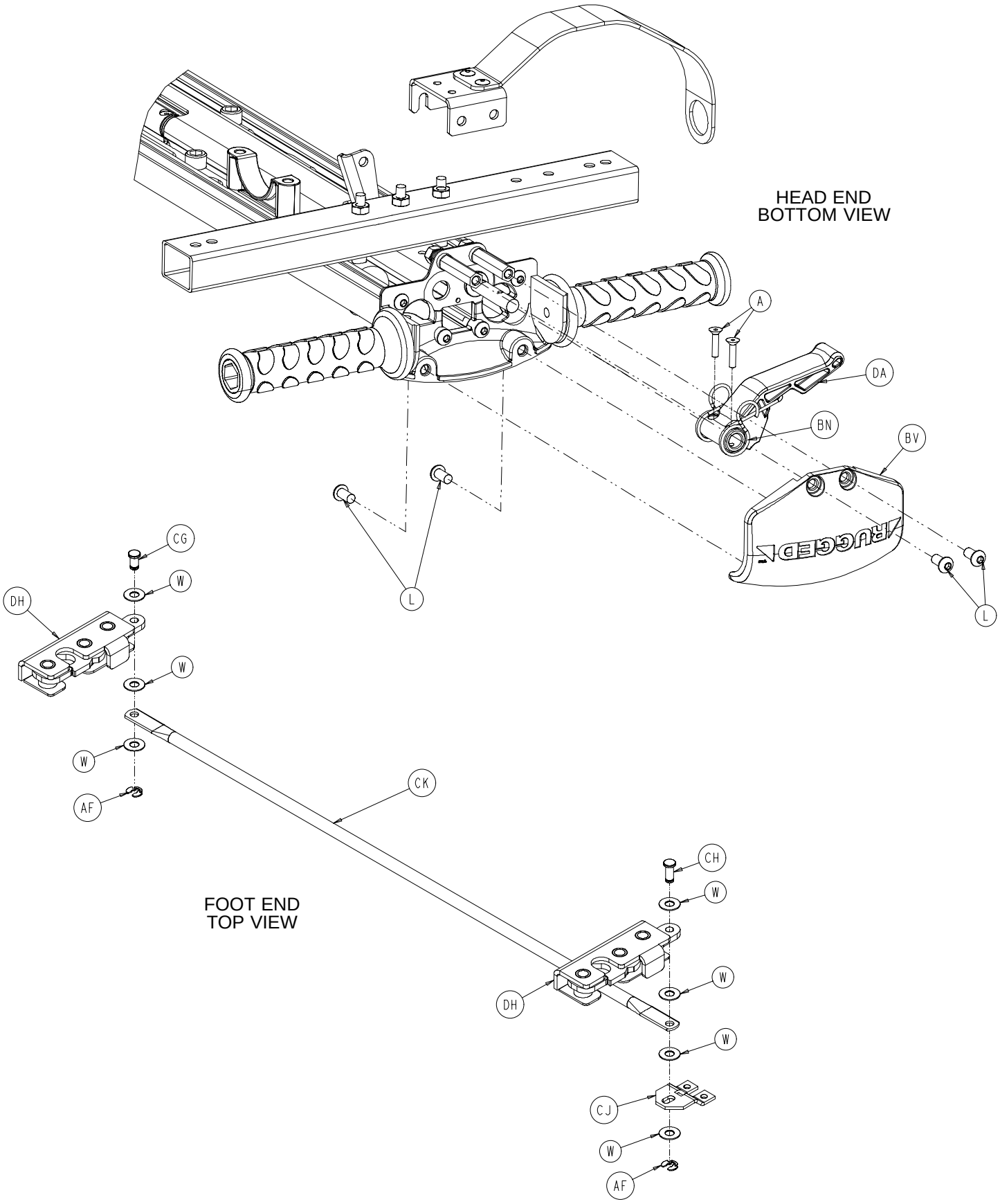

Base Assembly and Options

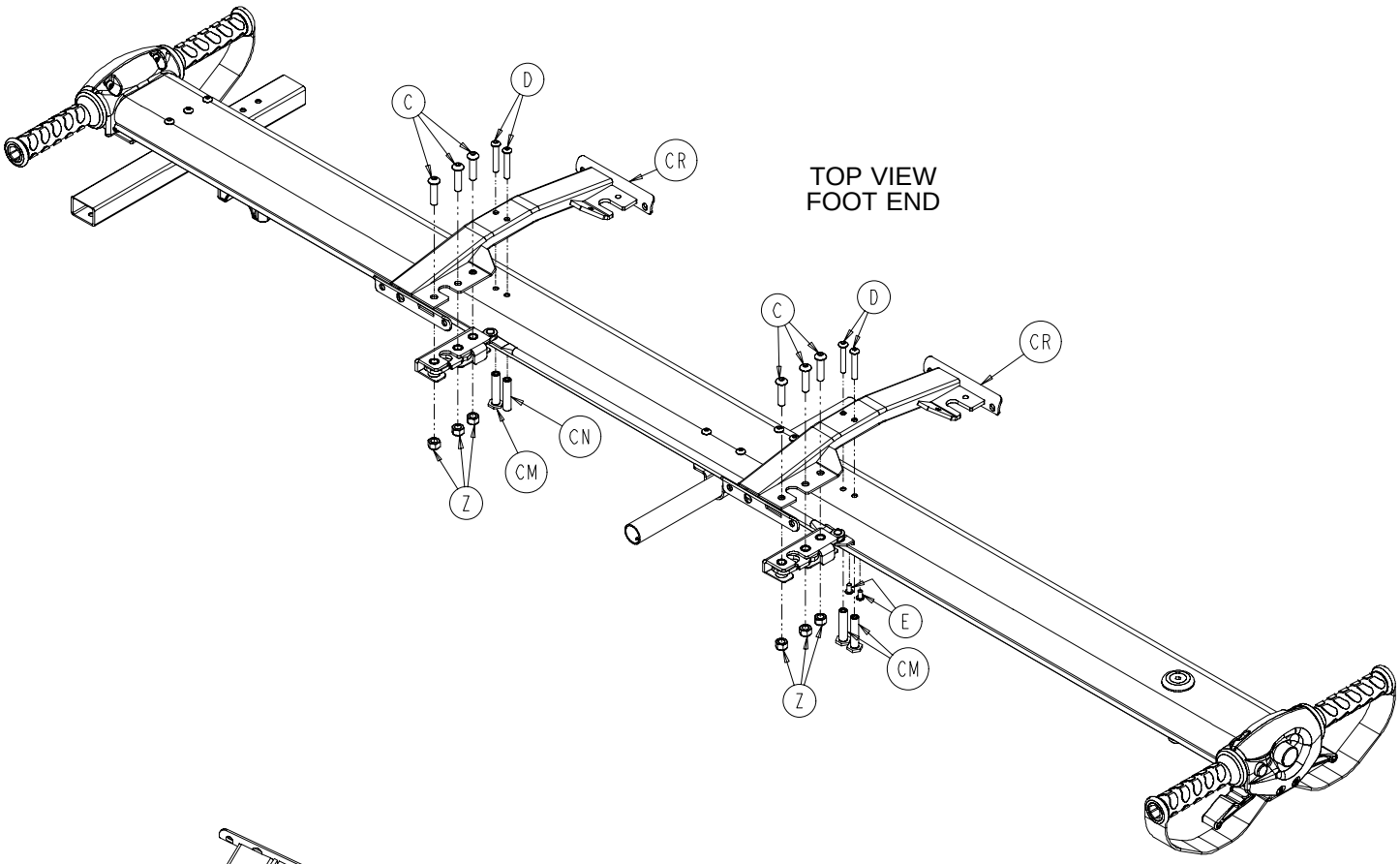

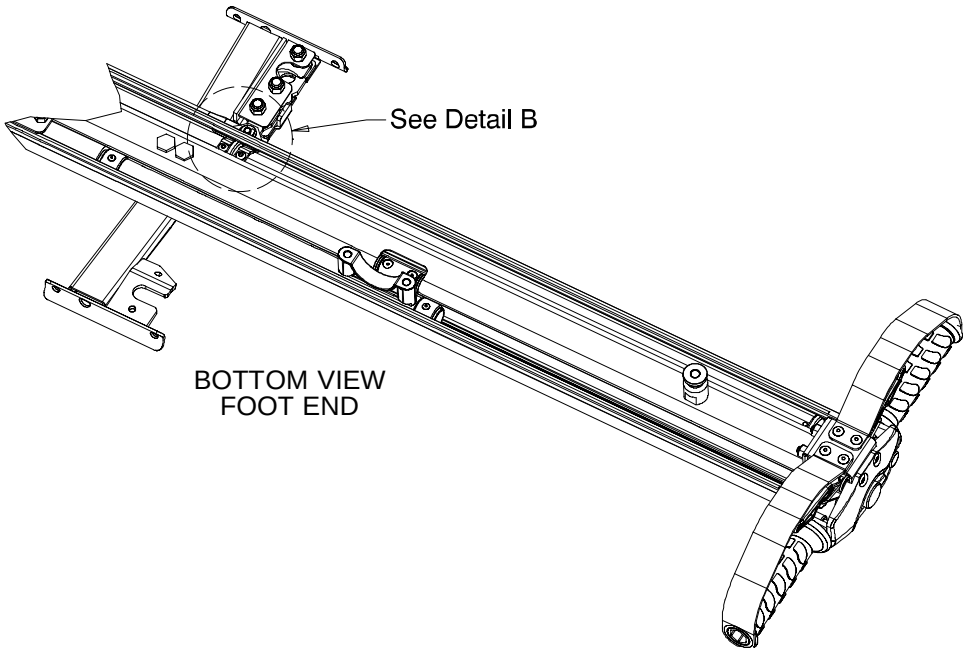

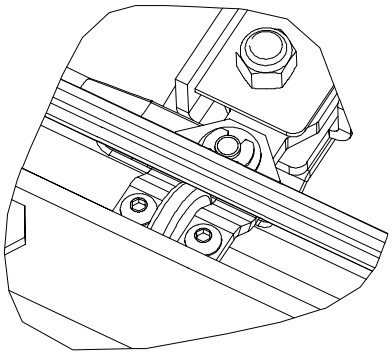

DETAIL B

Base Assembly and Options

HEAD END
TOP VIEW

FOOT END

COT RETAINING POST OPTION

Base Assembly and Options

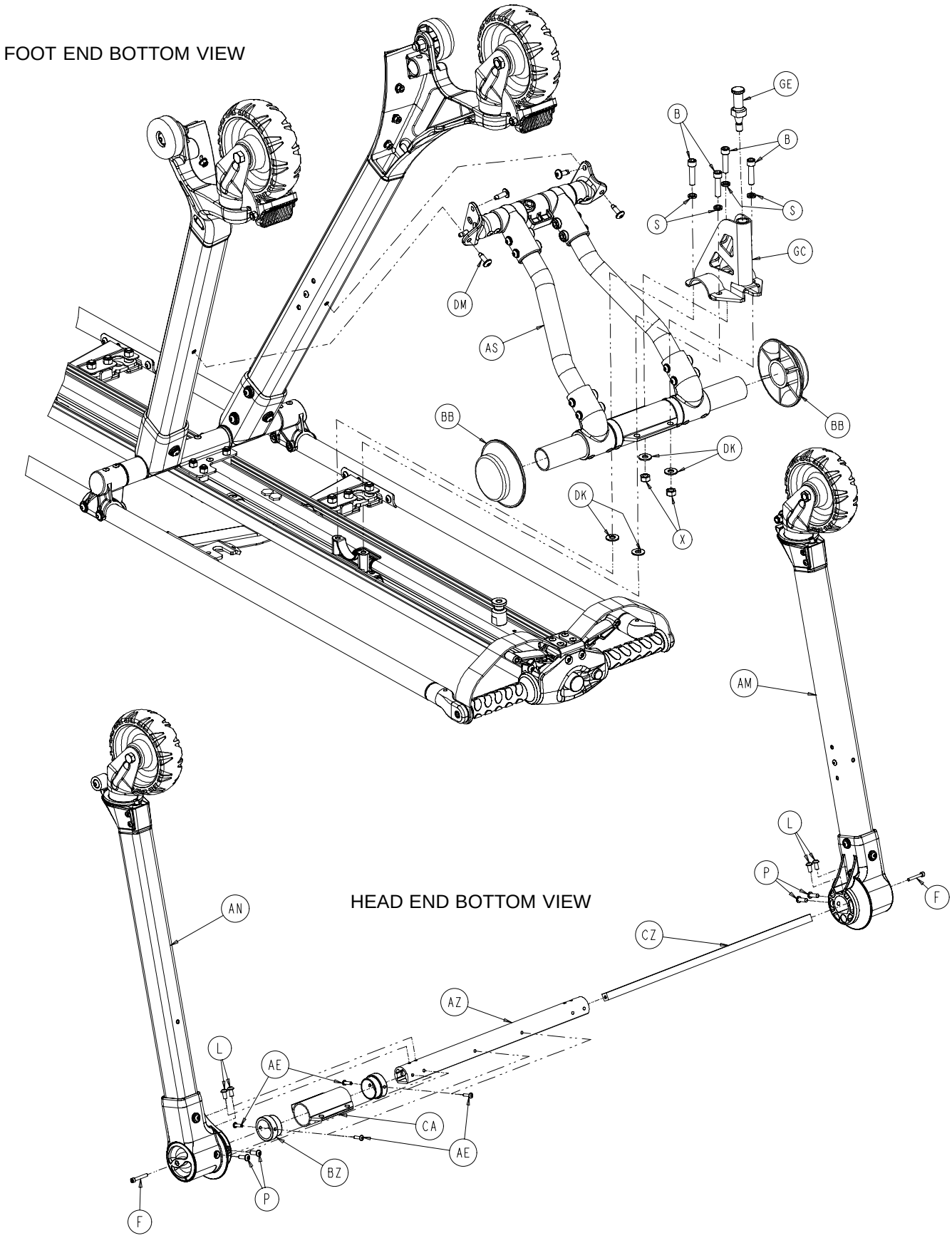

Base Assembly and Options

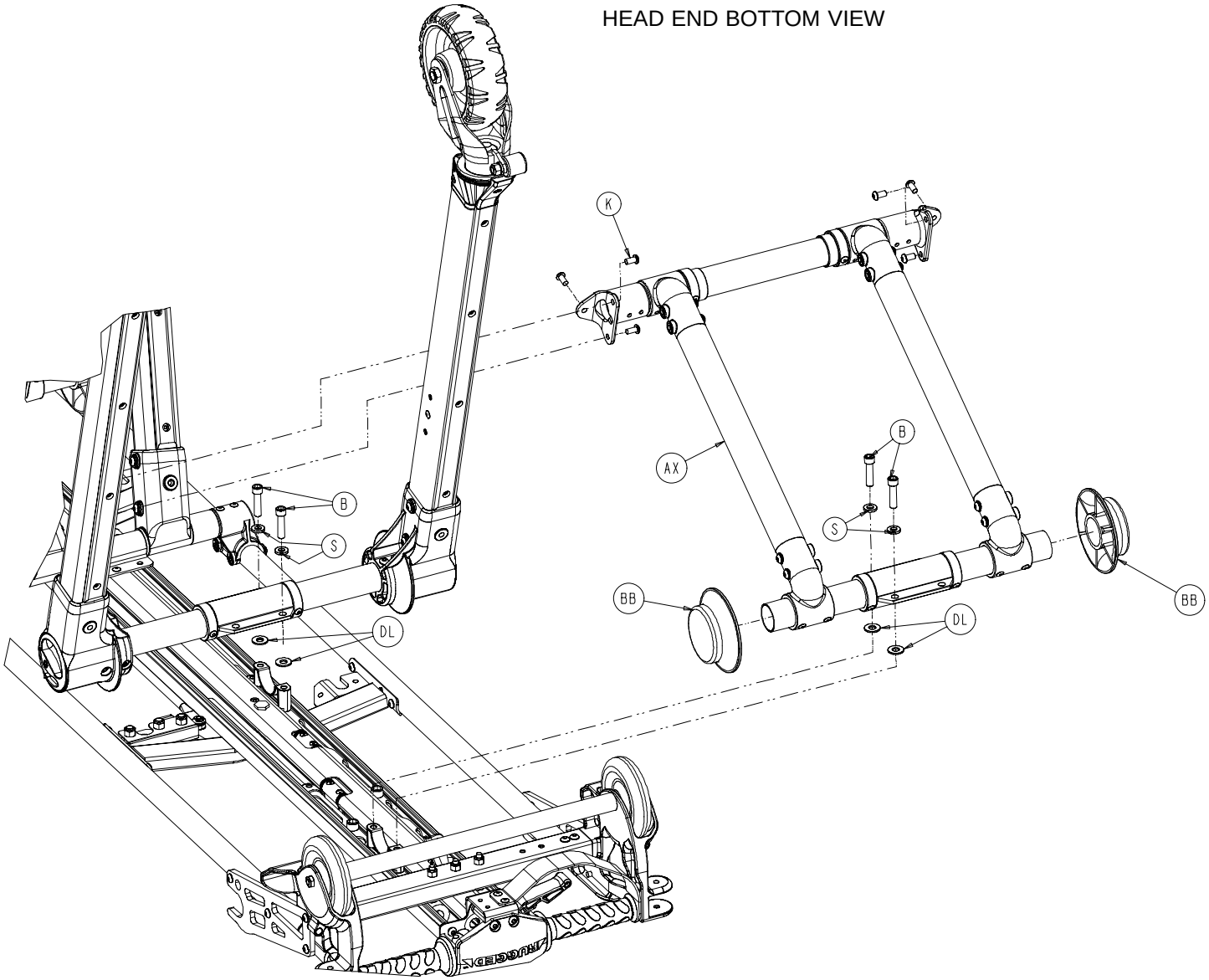

Base Assembly and Options

HEAD END BOTTOM VIEW

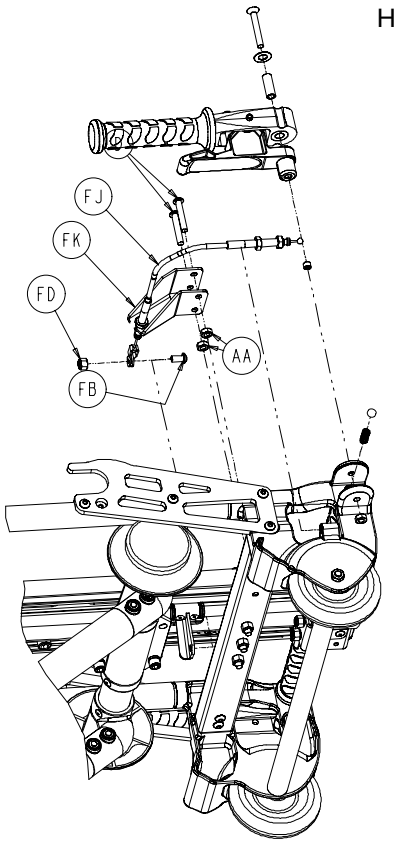

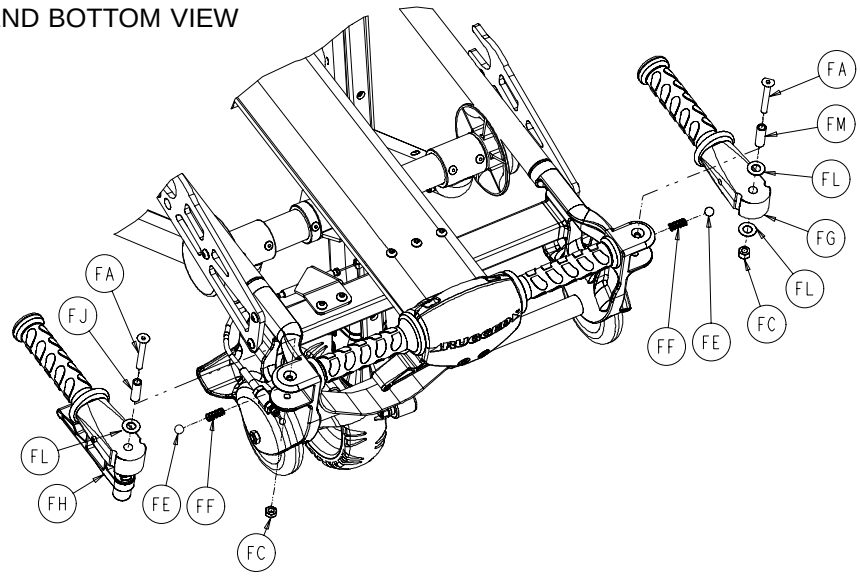

RETRACTABLE LIFT HANDLE OPTION

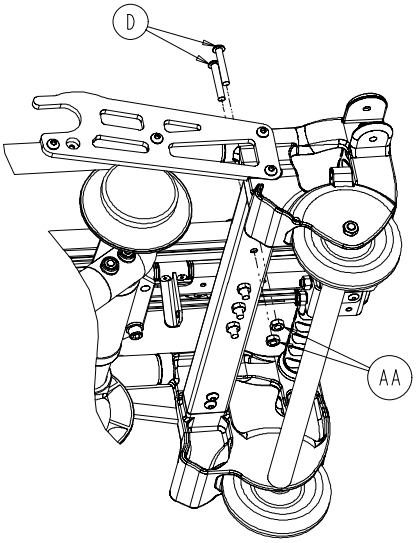

NO LIFT HANDLE OPTION
BOTTOM VIEW

Base Assembly and Options

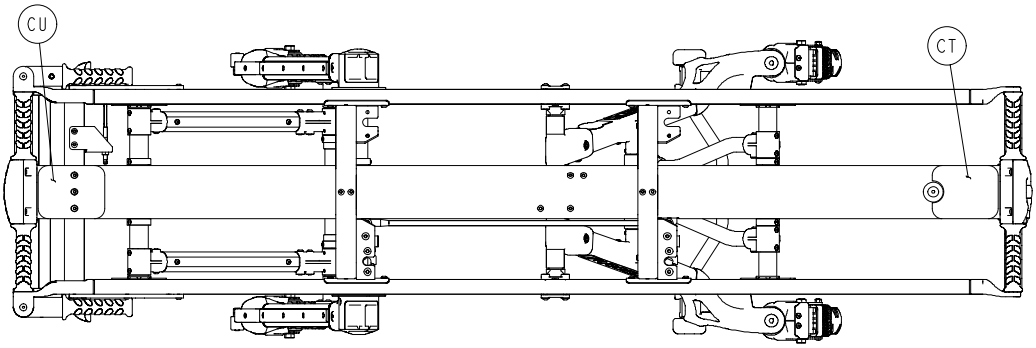

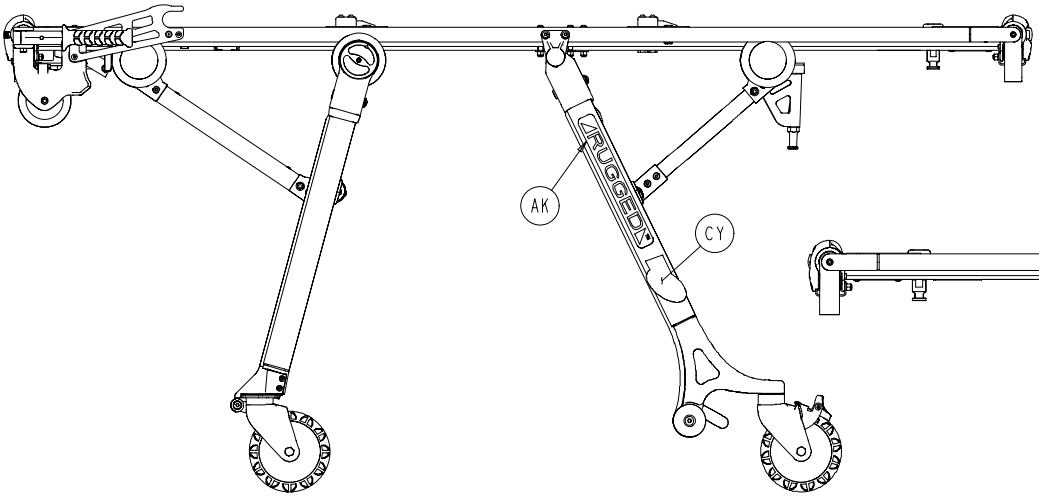

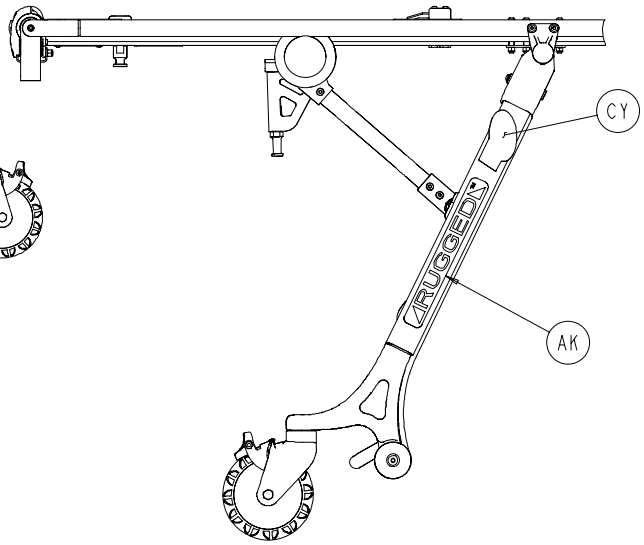

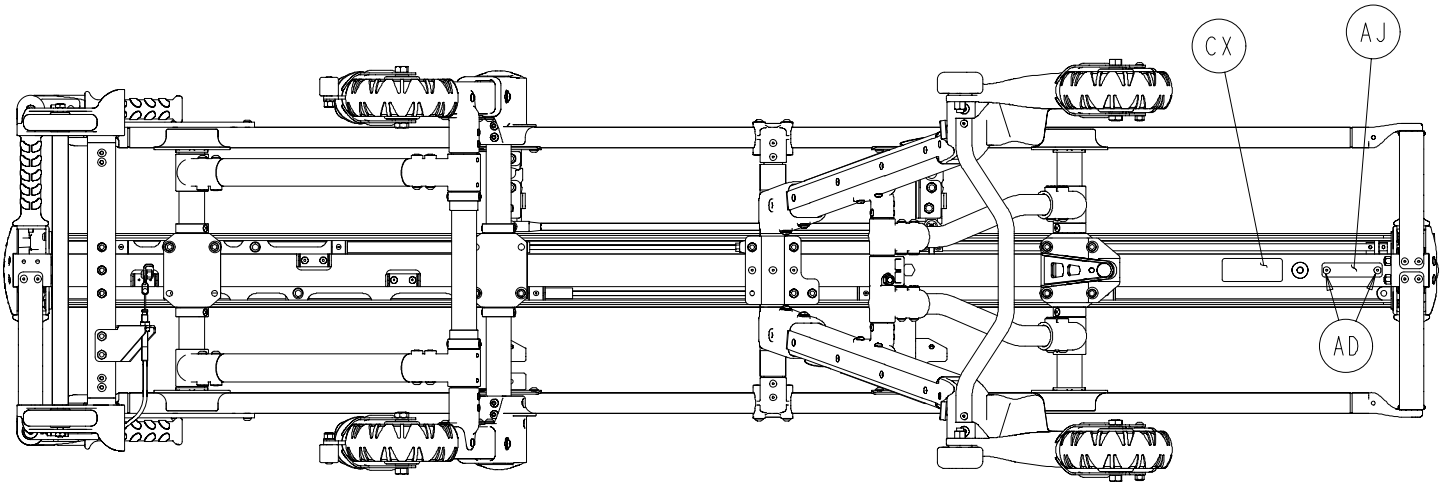

BASE COMMON COMPONENTS – PART NUMBER 6100–3–10 (REFERENCE ONLY)

Item	Part No.	Part Name	Qty.	Item	Part No.	Part Name	Qty.
A	1–134	Flat Ctrsk. Hd. Cap Scr.	14	BH	6100–3–92	Lock Rod, Head	1
B	4–39	Soc. Hd. Cap Screw	8	BJ	6100–3–93	Release Rod, Head	1
C	4–130	Soc. But. Hd. Cap Screw	6	BK	6100–3–94	Release Rod, Foot	1
D	4–135	Soc. But. Hd. Cap Screw	6	BL	6100–3–95	Handle Guard	3
E	4–136	Soc. But. Hd. Cap Screw	2	BM	6100–3–96	Front Gusset	2
F	4–160	Soc. Hd. Cap Screw	2	BN	6100–3–99	Rel. Hand. Torsion Spring	3
G	4–163	Soc. But. Hd. Cap Screw	4	BP	6100–3–100	Button Guide	1
H	4–204	Soc. But. Hd. Cap Screw	4	BR	6100–3–102	Blue Button	1
J	4–218	Soc. But. Hd. Cap Screw	3	BS	6100–3–103	Grip Tube	4
K	4–232	Soc. But. Hd. Cap Screw	6	BT	6100–3–104	Threaded Spacer	4
L	4–325	But. Hd. Cap Screw	24	BU	6100–3–106	End Control Casting	2
M	4–334	Soc. But. Hd. Cap Screw	8	BV	6100–3–107	Rel. Control Cover, Hd.	1
N	4–453	Soc. Hd. Cap Screw	4	BW	6100–3–108	Foot Release Cover	1
P	4–468	But. Hd. Cap Screw	12	BX	6100–3–113	Wheel	2
R	4–499	H. Soc. But. Hd. Cap Scr.	1	BY	6100–3–117	Side Tube Dampener	1
S	11–488	Washer	8	BZ	6100–3–183	Stop Collar Bushing	2
T	11–427	Washer	2	CA	6100–3–184	Slide Tube Support	1
U	11–448	Washer	8	CB	6100–3–188	Side Tube Dampener	1
V	13–45	Lock Washer	12	CC	6100–3–189	Side Tube Dampener	1
W	14–92	Nylon Washer	7	CD	6100–3–197	Clevis Pin	1
X	16–20	Hex Nut	2	CE	6100–3–218	Support Post Washer	1
Y	16–28	Hex Nut	11	CF	6100–3–219	Fastener Support Post	1
Z	16–36	Hex Nut	6	CG	6100–3–225	Clevis Pin	1
AA	16–78	Hex Nut	6	CH	6100–3–226	Clevis Pin	1
AC	16–316	Centerlock Hex Nut	2	CJ	6100–3–229	Lit. Rel. Arm Connector	1
AD	25–79	Blind Rivet	11	CK	6100–3–230	Litter Release Tube Link	1
AE	25–86	Blind Rivet	4	CL	6100–3–232	Litter Release Rod Link	1
AF	28–303	Retaining Ring	3	CM	6100–3–233	Flange Nut	3
AG	38–344	Compression Spring	1	CN	6100–3–234	Sleeve Nut	1
AH	38–473	Extension Spring	1	CP	6100–3–240	Retaining Hook	2
AJ	6060–90–2	Serial Number Tag	1	CR	6100–3–259	Latch Tube Weldment	2
AK	6060–90–3	Large Rugged Label	2	CS	6100–10–50	Retract. Handle Actuator	1
AL	6080–40–11	Grip	4	CT	6100–100–1	Foot End Release Label	1
AM	(page 14 & 15)	Front Leg Ass'y, Right	1	CU	6100–100–2	Head End Release Label	1
AN	(page 14 & 15)	Front Leg Ass'y, Left	1	CV	6100–100–3	Steer Lock Label, Right	1
AP	(page 16 & 17)	Back Leg Assembly, Left	1	CW	6100–100–4	Steer Lock Label, Left	1
AR	(page 16 & 17)	Back Leg Assembly, Right	1	CX	6100–100–5	Base Specification Label	1
AS	(page 20 & 21)	Rear Strut Assembly	1	CY	6100–100–8	M–1 Logo Label	2
AT	(page 22)	Hd. End Slide Tube Ass'y	1	CZ	6100–203–74	Torsion Rod	1
AU	(page 23)	Load Slide Tube Ass'y	1	DA	6100–203–97	Release Handle	2
AV	(page 24)	Ft. End Slide Tube Ass'y	1	DB	6100–203–98	Release Handle	1
AW	(page 25)	Litter Release Rod Ass'y	1	DC	6100–203–101	Green Safety Button	1
AX	(page 26 & 27)	Hd. End Leg Supt. Ass'y	1	DD	6100–203–105	Center Extrusion	1
AY	6100–3–69	Hat Stamping	1	DE	6100–203–185	Rectangular Guide Tube	1
AZ	6100–3–73	Hd. Leg Upper Crosstube	1	DF	6100–303–50	Outer Tube, Right	1
BA	6100–3–76	Release Rod Bushing	11	DG	6100–303–51	Outer Tube, Left	1
BB	6100–3–81	Roller	4	DH	6372–10–13	Rotary Lock	2
BC	6100–3–82	Hd. Load Wheel Crosstube	1	DJ	25–133	Blind Rivet	4
BD	6100–3–83	Base Guide Tube Support	2	DK	11–447	Washer	8
BE	6100–3–84	Stationary Pivot Tube, Ft.	1	DL	6100–3–246	Spacer	2
BF	6100–3–87	Spacer	6	DM	7–65	Truss Hd. Self–Tap Torx	6
BG	6100–3–91	Lock Slide Tube	3	DN	52–314	Spacer	2

Base Assembly and Options

RETRACTABLE LIFT HANDLE OPTION P/N 6100–10

Item	Part No.	Part Name	Qty.
FA	1–135	Flat Ctrsnk. Hd. Cap Scr.	2
FB	4–232	H. Soc. But. Hd. Cap Scr.	1
FC	16–28	Hex Nut	2
FD	16–78	Centerlock Hex Nut	1
FE	31–136	Nylon Ball	2
FF	38–382	Compression Spring	2
FG	(page 28)	Lift Handle Assembly	1
FH	(page 29)	Lift Handle Assembly, Lt.	1
FJ	6100–210–65	Retract. Handle Pull Cable	1
FK	6100–210–66	Retract. Handle Pull Brkt.	1
FL	14–20	Nylon Washer	4
FM	6100–10–68	Lift Handle Spacer	2

RETAINING POST OPTION – P/N 6100–14

Item	Part No.	Part Name	Qty.
GA	4–484	H. Soc. But. Hd. Cap Scr.	2
GB	25–79	Blind Rivet	2
GC	6100–3–58	Retaining Post Wldmt.	1
GD	6100–3–242	Foot End Crosstube	1
GE	6100–31–120	Retaining Post	1
GF	6100–14–61	Threaded Plug	2

Front Leg Assembly, Right & Left

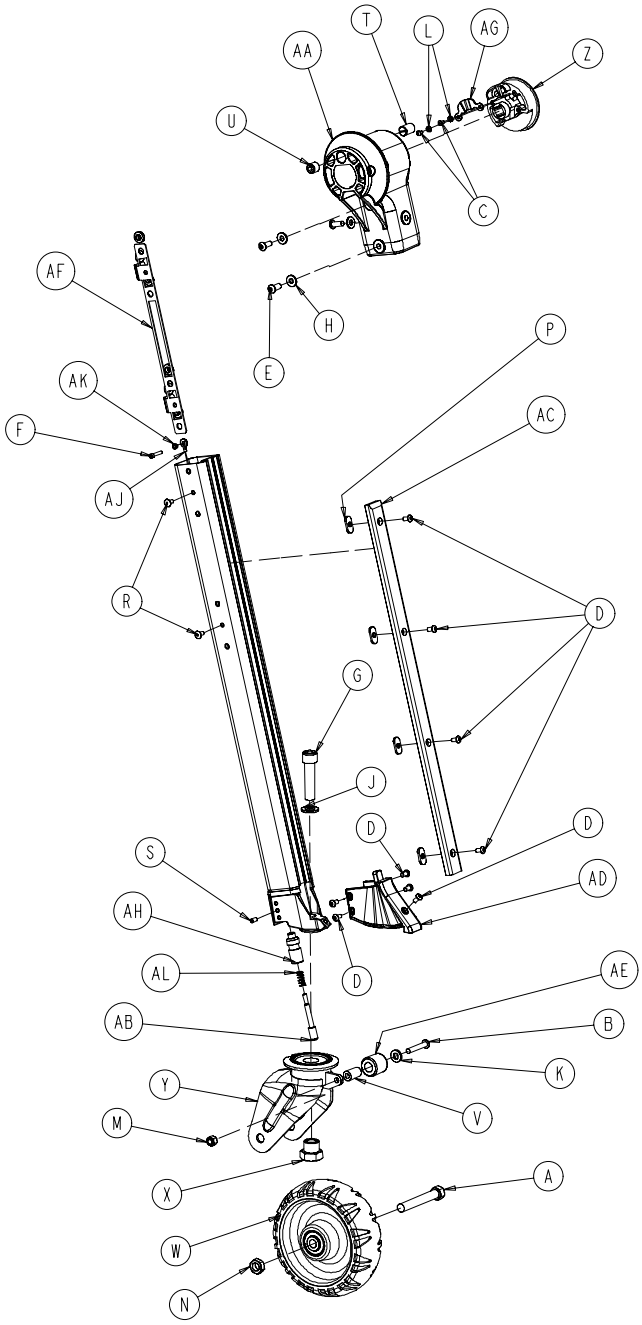

6100–3–23
COMMON COMPONENTS

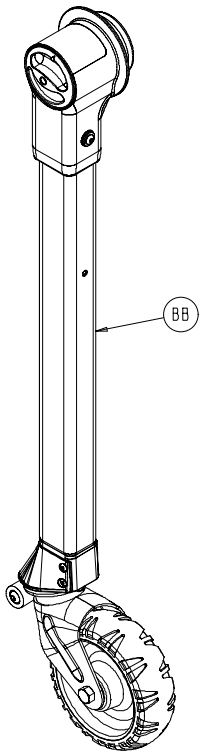

6100–3–11
RIGHT LEG

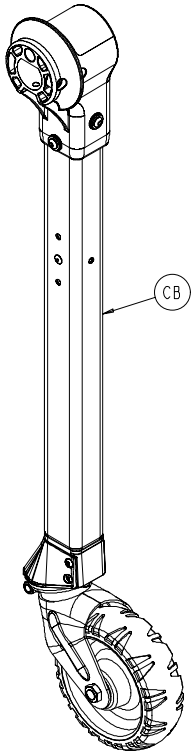

6100–3–12
LEFT LEG

Front Leg Assembly

FRONT LEG COMMON COMPONENTS – PART NUMBER 6100–3–23 (REFERENCE ONLY)

Item	Part No.	Part Name	Qty.	Item	Part No.	Part Name	Qty.
A	3–205	Hex Hd. Cap Screw	1	U	21–162	Hex Soc. Set Screw	1
B	4–135	But. Hd. Cap Screw	1	V	3000–300–428	Bushing	1
C	4–168	Soc. But. Hd. Cap Screw	2	W	(page 18)	Wheel Assembly	1
D	4–136	Soc. But. Hd. Cap Screw	9	X	6090–1–9	Caster Nut	1
E	4–156	Soc. But. Hd. Cap Screw	3	Y	6100–3–54	Caster Horn	1
F	4–101	Soc. But. Hd. Cap Screw	1	Z	6100–3–72	Caster Lock Knob	1
G	4–454	Soc. Hd. Cap Screw	1	AA	6100–3–128	Hd. End Upper Leg Pivot	1
H	11–456	Washer	3	AB	6100–3–136	Steer Lock Pin	1
J	11–13	Washer	1	AC	6100–3–138	Hd. Leg Bumper Strip	1
K	11–108	Washer	1	AD	6100–3–139	Hd. Cast. Mt. Bmpr. Cvr.	1
L	12–15	Lock Washer	2	AE	6100–3–140	Small Wheel	1
M	16–28	Hex Nut	1	AF	6100–3–193	Head End Nut Plate	1
N	16–60	Hex Nut	1	AG	6100–3–231	Caster Lock Insert Knob	1
P	16–120	Weld Nut	4	AH	6100–203–135	Steer Lock Bushing	1
R	25–79	Blind Rivet	2	AJ	6100–203–137	Steer Lock Rel. Cable	1
S	21–119	Set Screw	2	AK	6100–3–235	Steer Knob Bushing	1
T	21–156	Ball Plunger	1	AL	38–382	Compression Spring	1

FRONT LEG ASS'Y, RIGHT – P/N 6100–3–11

Item	Part No.	Part Name	Qty.
BA	6100–3–23	Common Components	1
BB	6100–3–52	Head End Leg Wldmt., Rt.	1

FRONT LEG ASS'Y, LEFT – P/N 6100–3–12

Item	Part No.	Part Name	Qty.
CA	6100–3–23	Common Components	1
CB	6100–3–53	Head End Leg Wldmt., Lt.	1

Back Leg Assembly, Right and Left

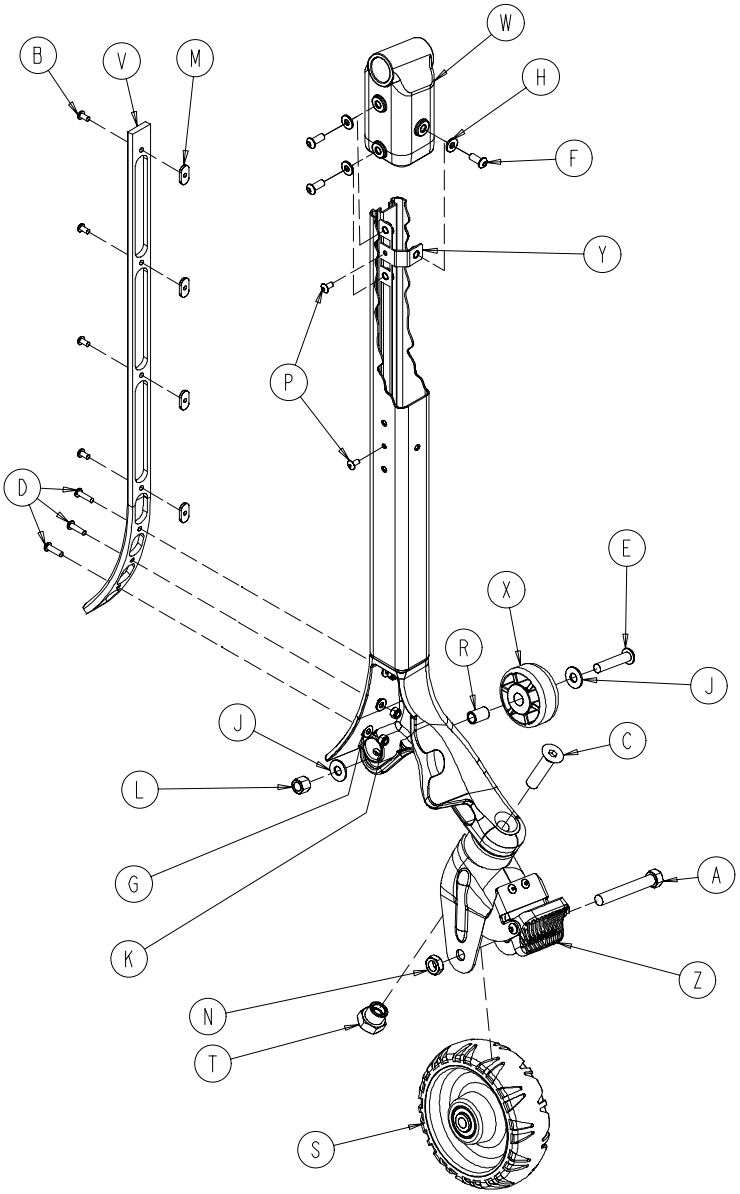

6100–3–20
COMMON COMPONENTS

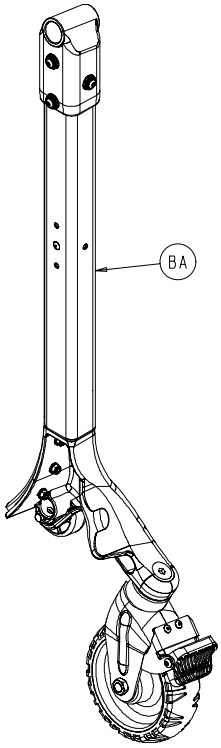

6100–3–14
RIGHT LEG

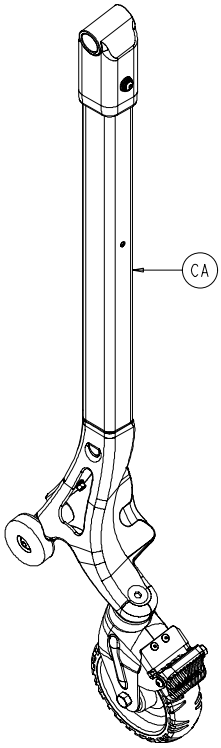

6100–3–15
LEFT LEG

Back Leg Assembly, Right and Left

BACK LEG COMMON COMPONENTS – PART NUMBER 6100–3–20 (REFERENCE ONLY)

Item	Part No.	Part Name	Qty.	Item	Part No.	Part Name	Qty.
A	3–205	Hex Hd. Cap Screw	1	M	16–120	Weld Nut	4
B	4–136	Soc. But. Hd. Cap Screw	4	N	16–60	Centerlock Hex Nut	1
C	4–319	Flat Ctrsnk. Hd. Cap Scr.	1	P	25–79	Blind Rivet	2
D	4–456	But. Hd. Cap Screw	3	R	81–37	Bronze Bushing	1
E	4–462	But. Hd. Cap Screw	1	S	(page 18)	Wheel Assembly	1
F	4–156	But. Hd. Cap Screw	3	T	6090–1–9	Caster Nut	1
G	11–453	Washer	3	V	6100–3–149	Front Leg Bumper	1
H	11–456	Washer	3	W	6100–3–150	Ft. End Upper Leg Pivot	1
J	11–457	Washer	2	X	6100–3–151	Foot End Load Wheel	1
K	16–3	Hex Nut	3	Y	6100–3–194	Head End Nut Plate	1
L	16–117	Stover Lock Nut	1	Z	(page 19)	Wheel Lock Assembly	1

BACK LEG ASS'Y, RIGHT – P/N 6100–3–15

Item	Part No.	Part Name	Qty.
CA	6100–3–57	Foot End Leg Wldmt., Rt.	1
CB	6100–3–20	Common Components	1

BACK LEG ASS'Y, LEFT – P/N 6100–3–14

Item	Part No.	Part Name	Qty.
BA	6100–3–56	Foot End Leg Wldmt., Lt.	1
BB	6100–3–20	Common Components	1

6060–2–10 Wheel Assembly

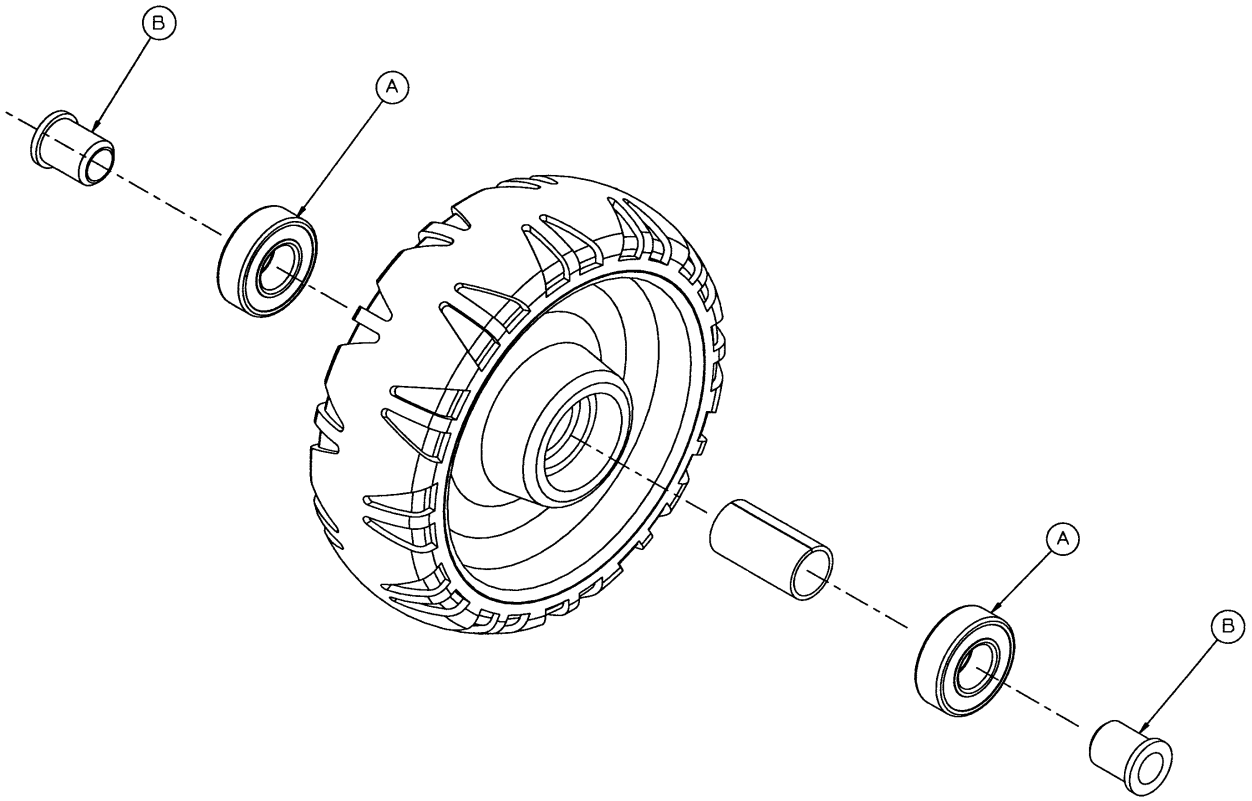

Item	Part No.	Part Name	Qty.
A	81–226	Bearing	2
B	715–1–255	Wheel Bushing	2

6100–3–22 Wheel Lock Assembly

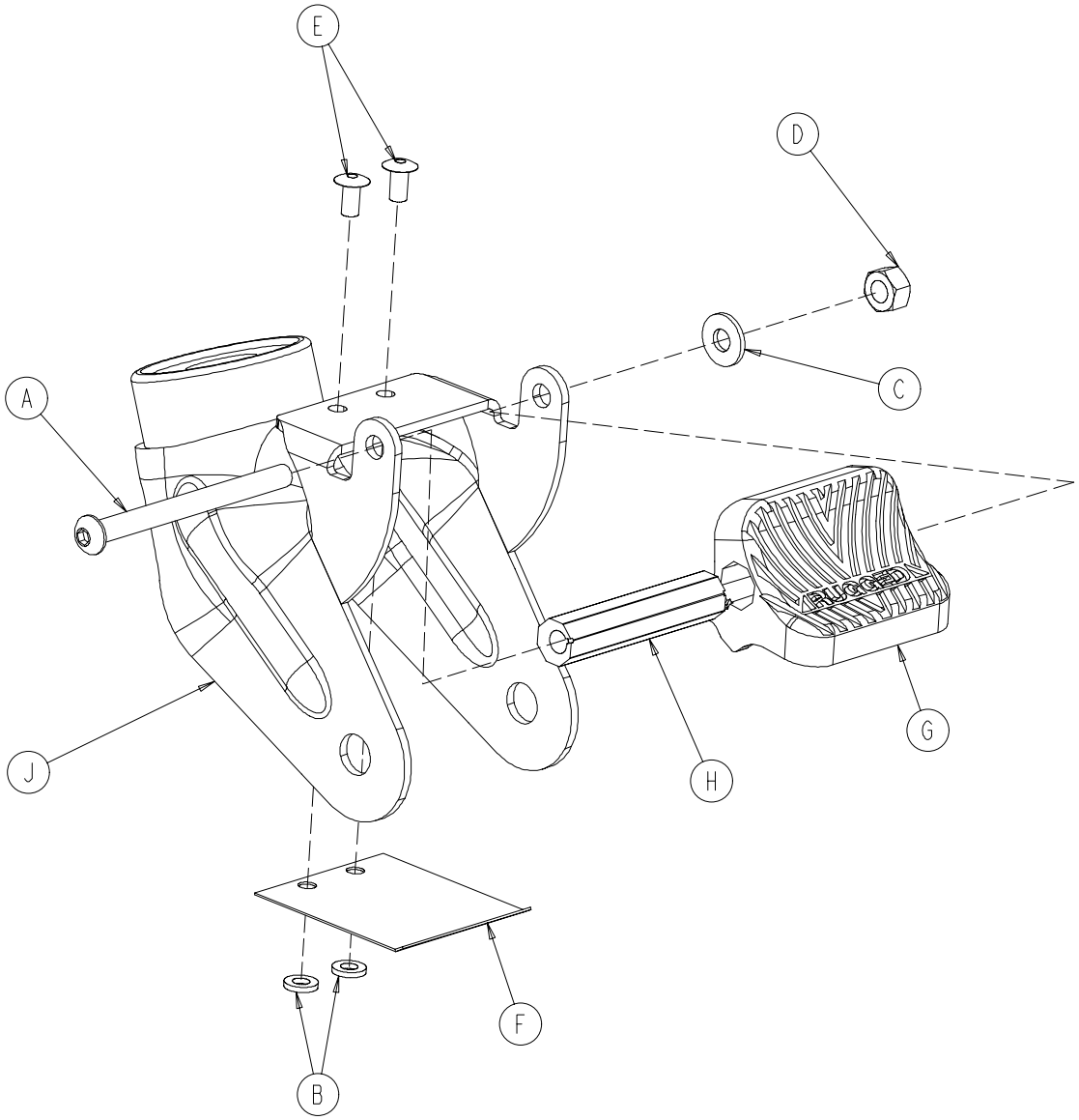

Item	Part No.	Part Name	Qty.
A	4–67	Hex Soc. But. Hd. Cap Screw	1
B	11–454	Washer	2
C	11–456	Washer	1
D	16–118	Center Lock Hex Nut	1
E	25–79	Blind Rivet	2
F	6080–100–32	Spring	1
G	6080–200–30	Adjustable Caster Lock Pedal	1
H	6080–200–41	Octagonal Sleeve	1
J	6100–3–55	Caster Horn	1

Rear Strut Assembly

Assembly part number 6100–3–16 (reference only)

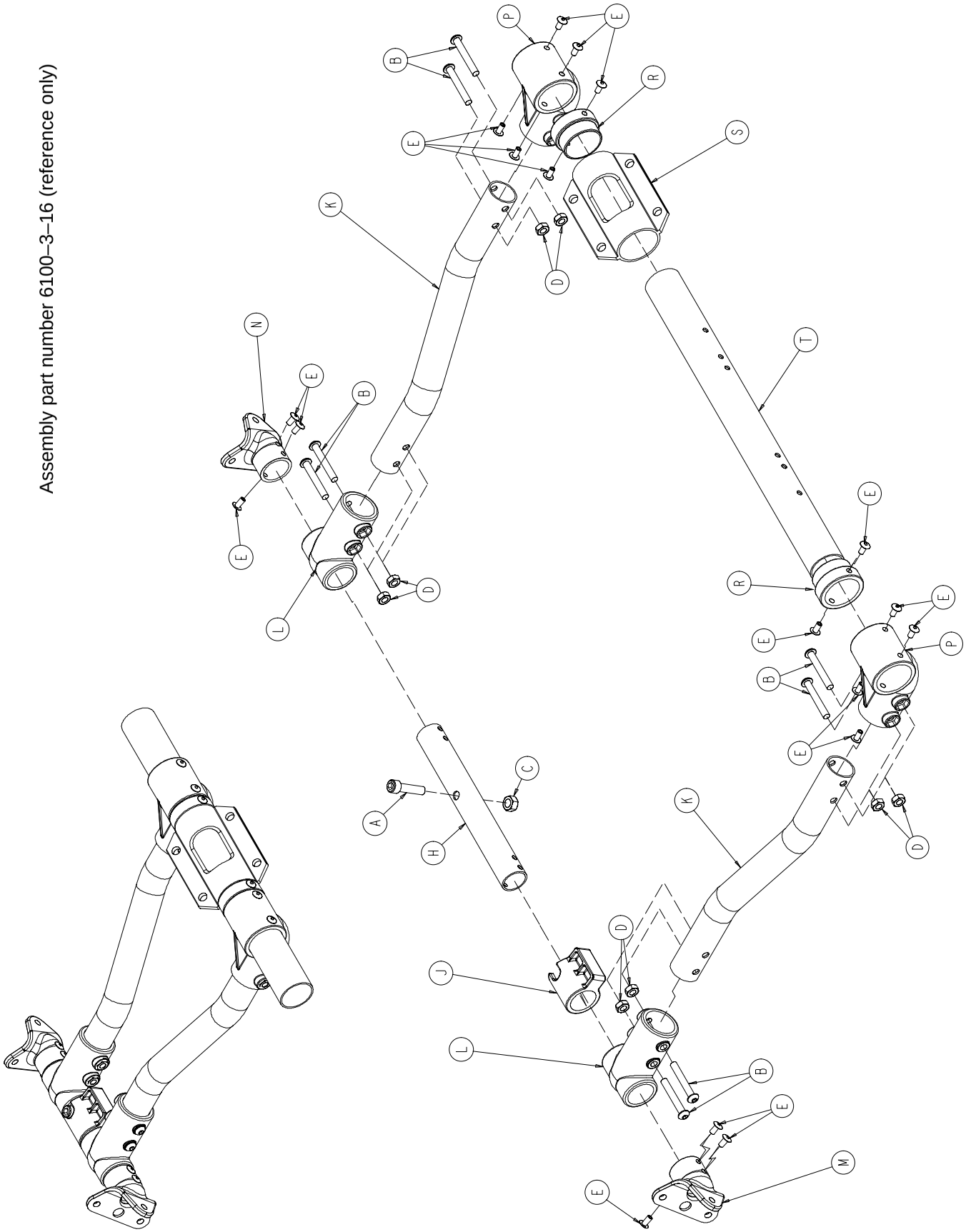

Rear Strut Assembly

Item	Part No.	Part Name	Qty.
A	4–39	Socket Hd. Cap Screw	1
B	4–204	Socket But. Hd. Cap Screw	8
C	16–20	Hex Nut	1
D	16–78	Hex Nut	8
E	25–133	Blind Rivet	18
H	6100–3–70	Foot End Lower Pivot Tube	1
J	6100–3–123	Foot End Strut Hard Stop	1
K	6100–3–124	Foot End Strut Tube	2
L	6100–3–125	Straight “T” Pivot	2
M	6100–3–143	Pivot Tube Leg Support, Rt.	1
N	6100–3–144	Pivot Tube Leg Support, Lt.	1
P	6100–3–170	Fowler/Gatch Strut Pivot	2
R	6100–3–183	Stop Collar Bushing	2
S	6100–3–184	Slide Tube Support	1
T	6100–3–187	Ft. End Upper Strut Crosstube	1

Head End Slide Tube Assembly

Assembly part number 6100–3–17 (reference only)

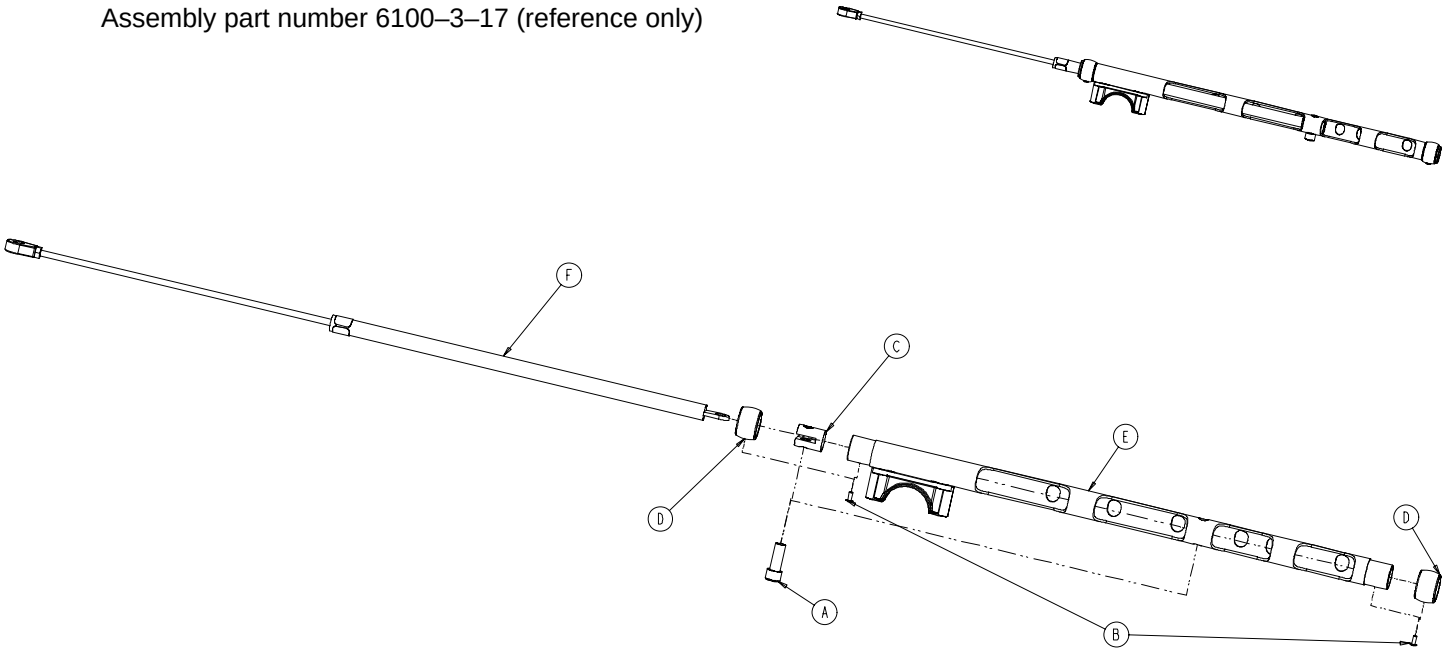

Item	Part No.	Part Name	Qty.
A	4–164	Socket Hd. Cap Screw	1
B	25–40	Blind Rivet	2
C	6100–3–116	Cylinder Mounting Block	1
D	6100–3–190	Lock Tube Slide Bearing	2
E	6100–203–251	Foot End Slide Tube Wldmt.	1
F	6100–3–25	Pneumatic Spring Assembly	1

Load Slide Tube Assembly

Assembly part number 6100–3–18 (reference only)

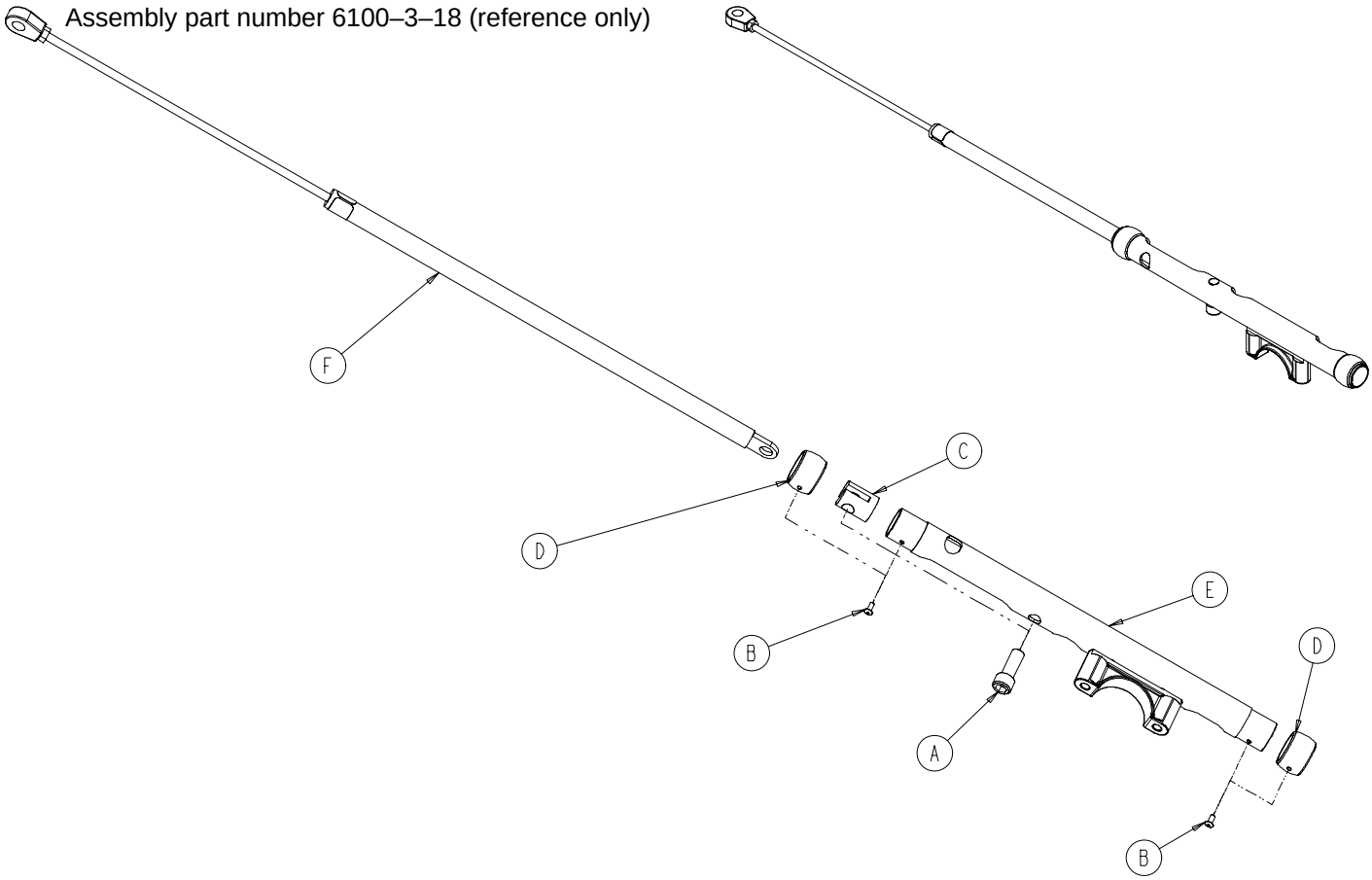

Item	Part No.	Part Name	Qty.
A	4–164	Socket Hd. Cap Screw	1
B	25–40	Blind Rivet	2
C	6100–3–116	Cylinder Mounting Block	1
D	6100–3–190	Lock Tube Slide Bearing	2
E	6100–3–250	Hd. End Load Slide Tube Wldmt.	1
F	6100–3–26	Pneumatic Spring Assembly	1

Foot End Slide Tube Assembly

Assembly part number 6100–3–19 (reference only)

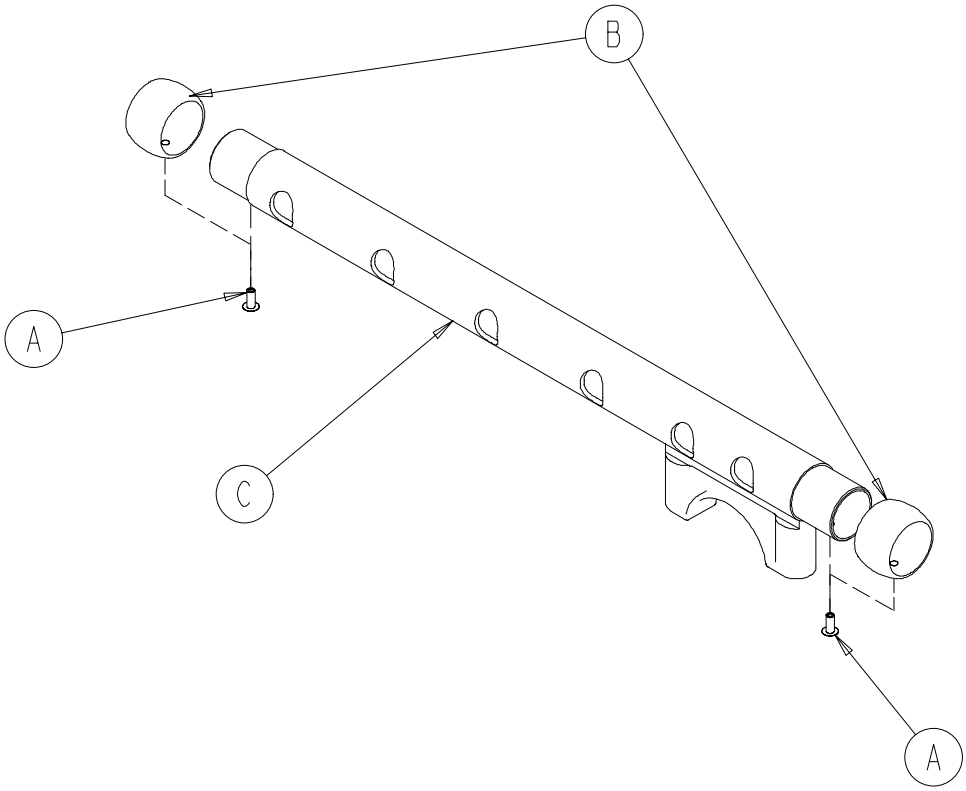

Item	Part No.	Part Name	Qty.
A	25–40	Blind Rivet	2
B	6100–3–190	Lock Tube Slide Bearing	2
C	6100–203–252	Hd. End Load Slide Tube Wldmt.	1

Litter Release Rod Assembly

Assembly part number 6100–3–21 (reference only)

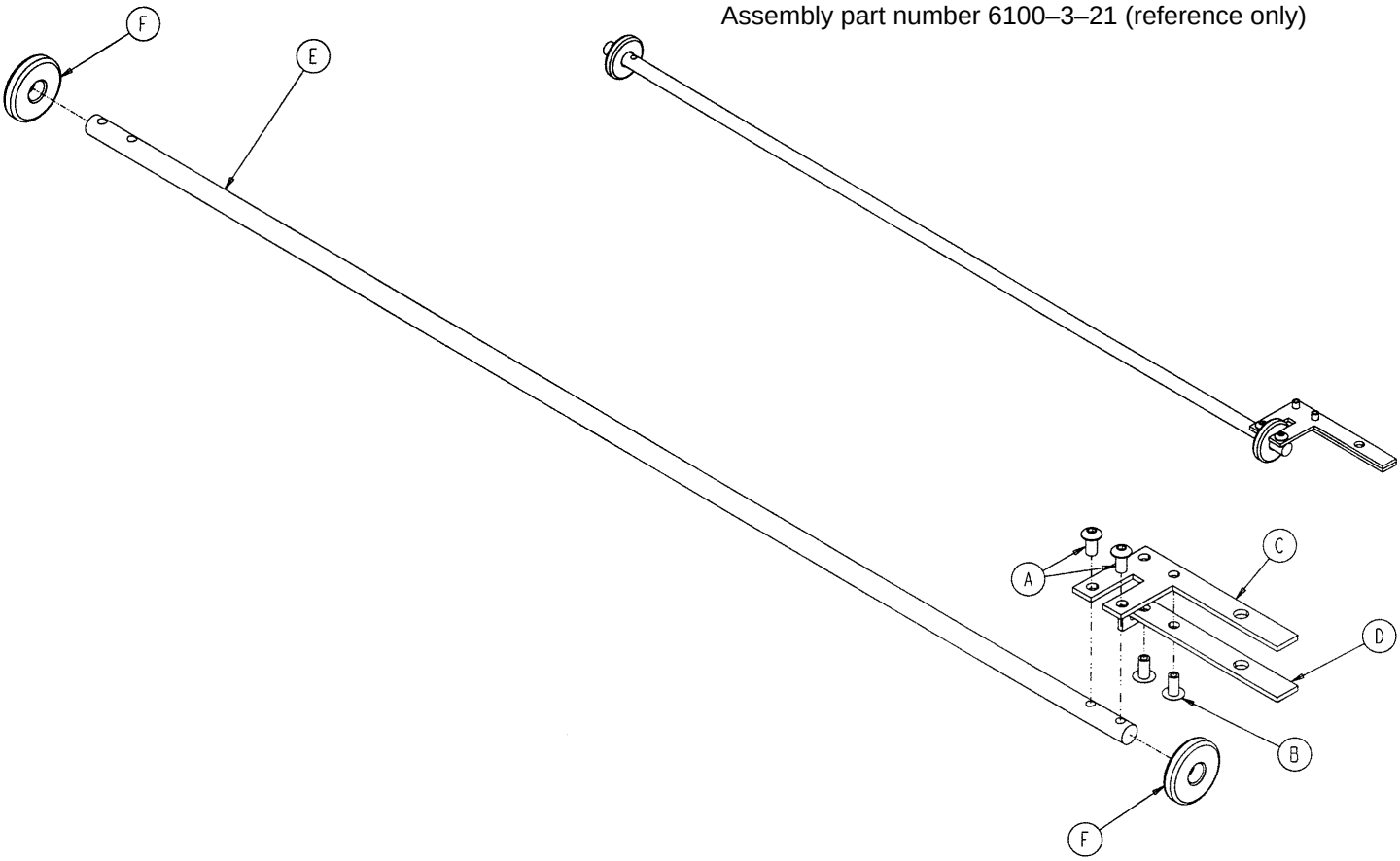

Item	Part No.	Part Name	Qty.
A	4–136	Soc. But. Hd. Cap Screw	2
B	25–79	Blind Rivet	2
C	6100–3–207	Litter Release Link Fork, Ft.	1
D	6100–3–208	Litter Release Spacer, Ft.	1
E	6100–3–227	Litter Release Rod Link	1
F	6100–3–228	Litter Release Rod Bushing	2

Head End Leg Support Assembly

Assembly part number 6100–3–24 (reference only)

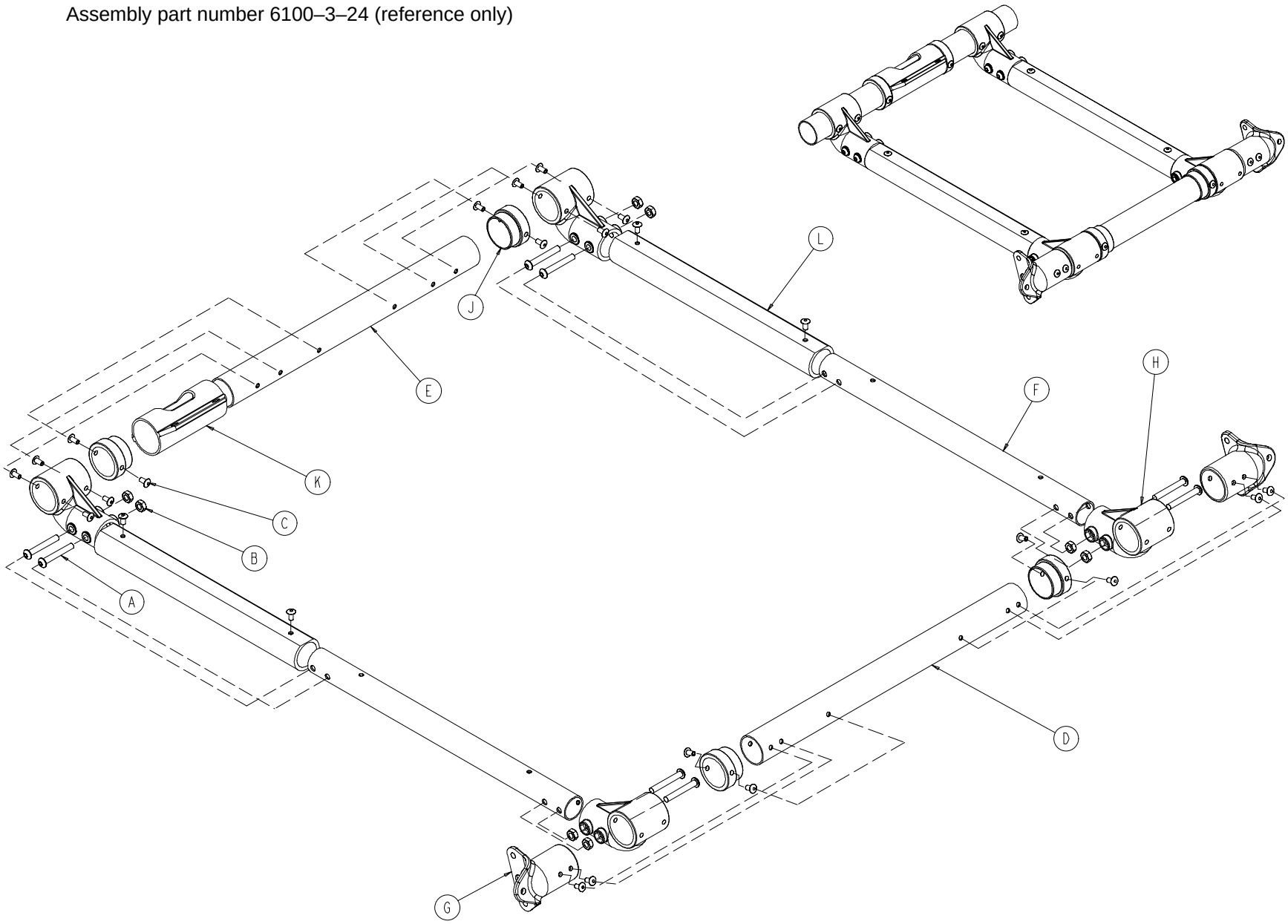

Head End Leg Support Assembly

Item	Part No.	Part Name	Qty.
A	4–204	Socket But. Hd. Cap Screw	8
B	16–78	Hex Nut	8
C	25–133	Blind Rivet	24
D	6100–3–78	Hd. End Lower Strut Crosstube	1
E	6100–3–80	Hd. End Upper Strut Crosstube	1
F	6100–3–126	Hd. End Leg Strut Tube	2
G	6100–3–133	Head End Leg Support	2
H	6100–3–170	Fowler/Gatch Strut Pivot	4
J	6100–3–183	Stop Collar Bushing	4
K	6100–3–184	Slide Tube Support	1
L	6100–203–127	Head End Leg Strut Bumper	2

6100–10–12 Lift Handle Assembly

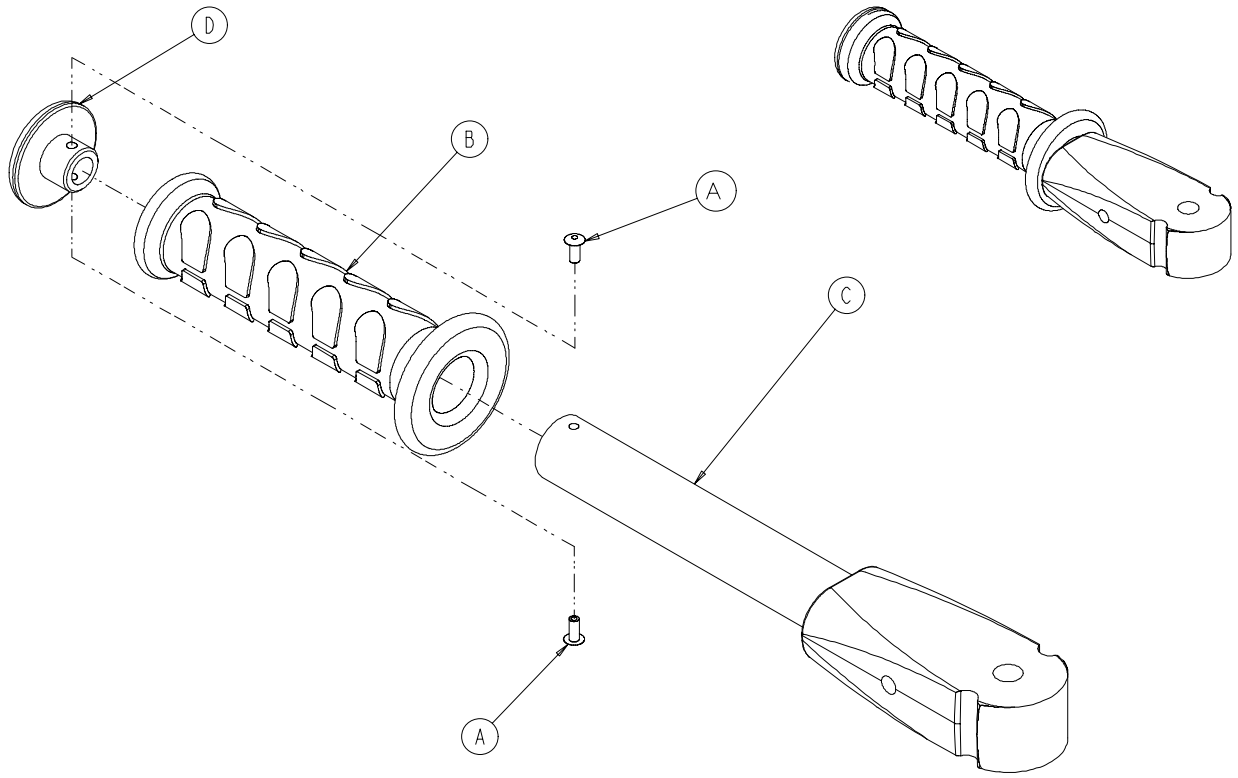

Item	Part No.	Part Name	Qty.
A	25–40	Aluminum Rivet	1
B	6080–40–11	Grip	1
C	6100–10–163	Lift Handle Pivot	1
D	6100–31–64	Handle Extension Retaining Plug	1

Optional Base Retractable Lift Handle Assembly, Left

Assembly part number 6100–10–13 (reference only)

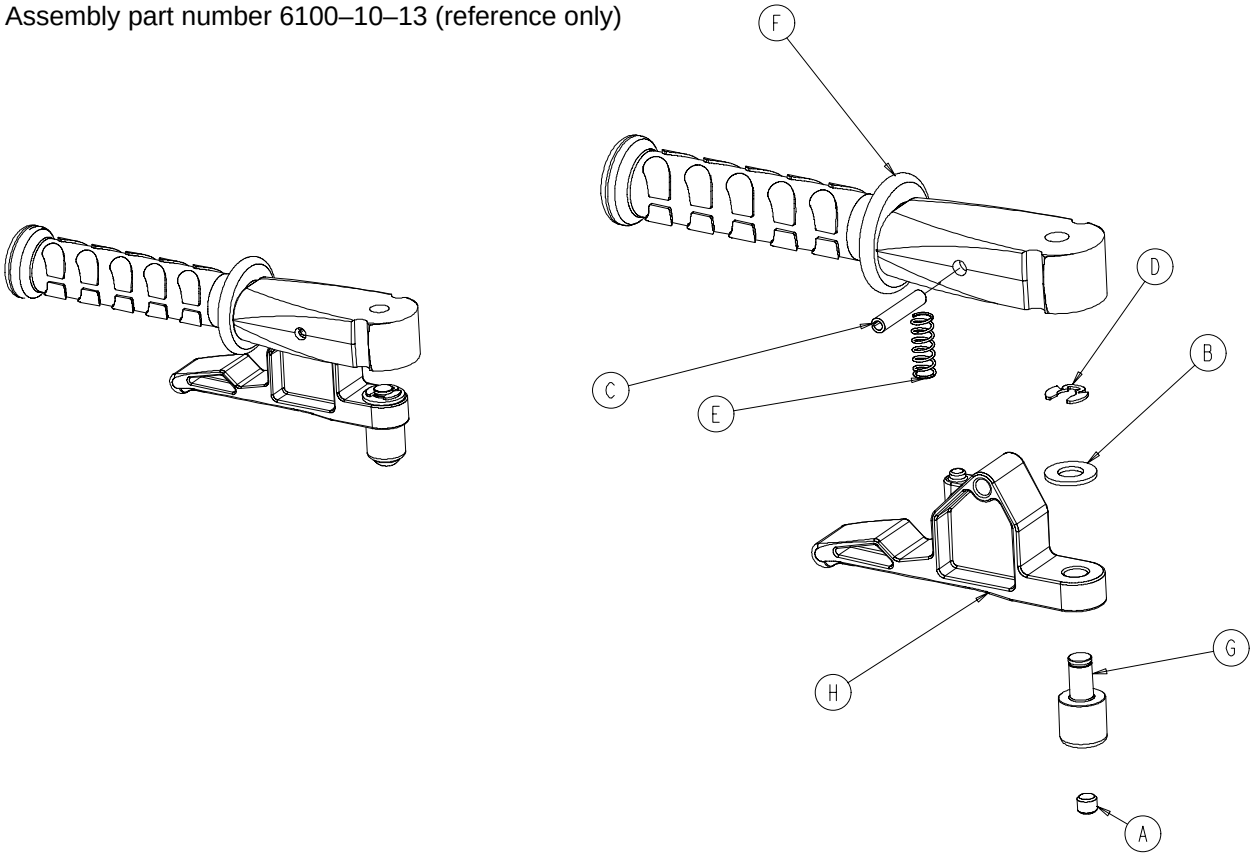

Item	Part No.	Part Name	Qty.
A	21–22	Set Screw	1
B	11–4	Washer	1
C	26–310	Spring Pin	1
D	28–181	Retaining Ring	1
E	38–344	Compression Spring	1
F	(page 28)	Lift Handle Assembly	1
G	6100–10–62	Retractable Handle Swivel	1
H	6100–10–64	Ret. Handle Release Lever	1

Litter Assembly and Options

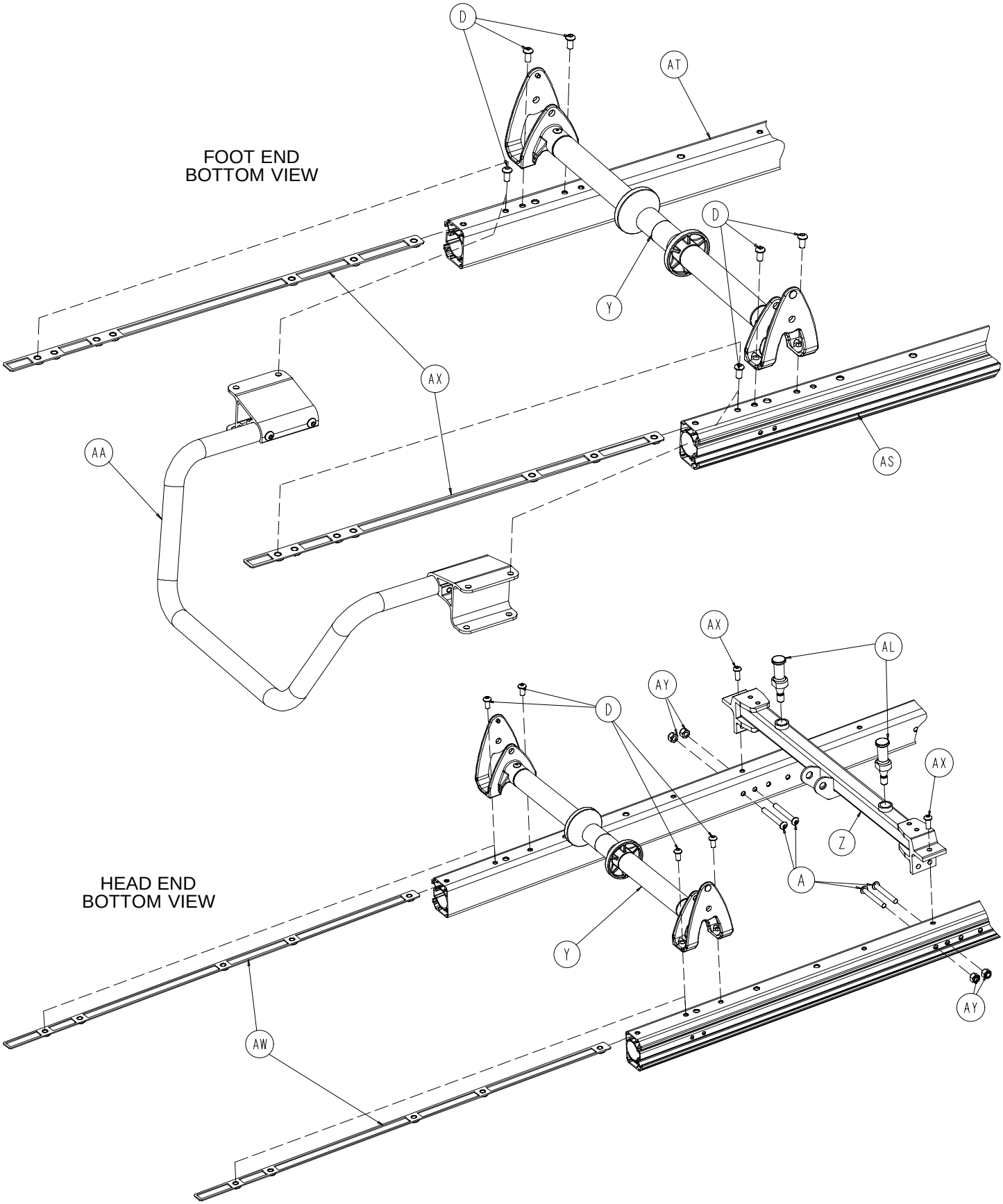

Litter Assembly and Options

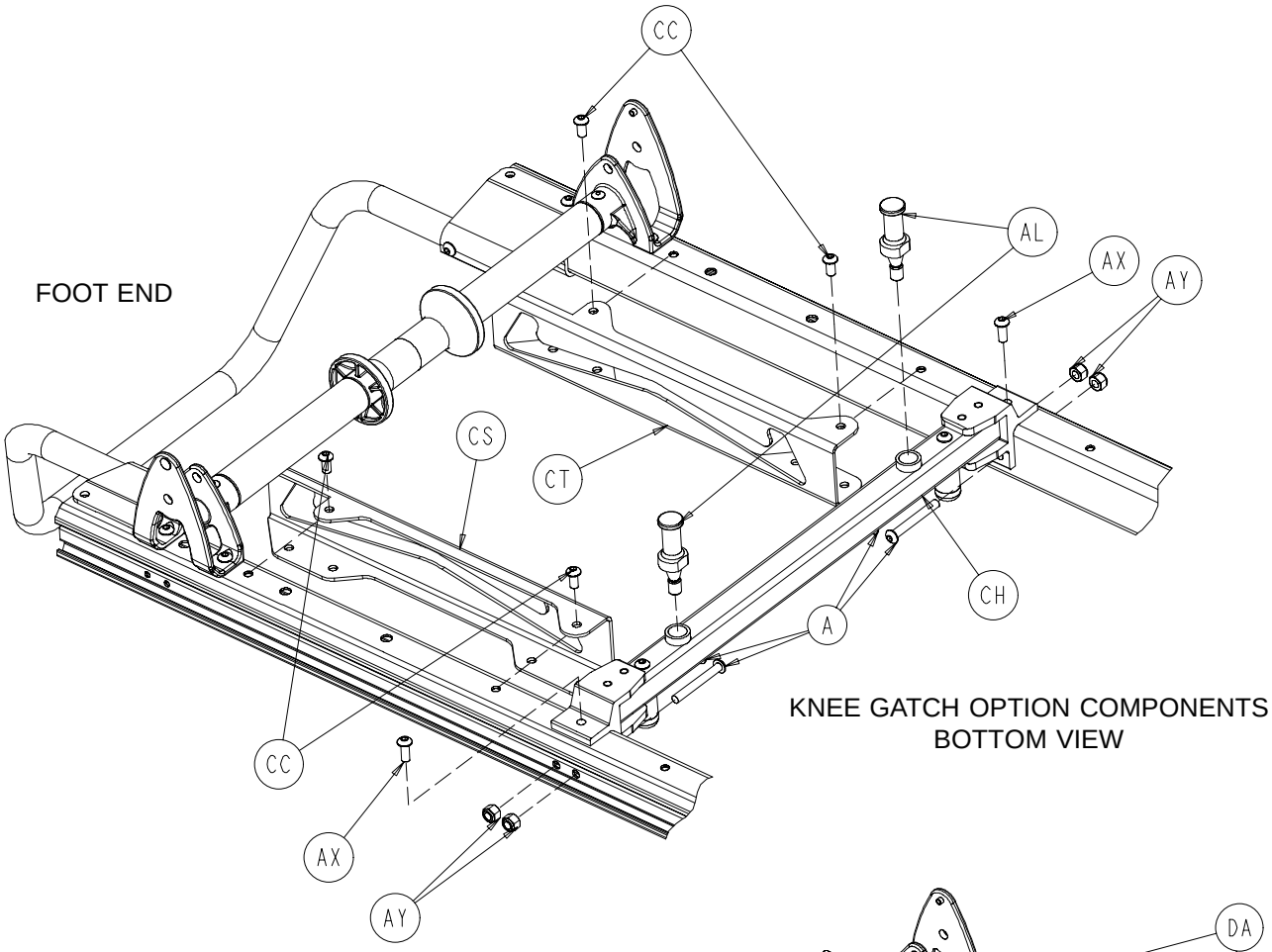

KNEE GATCH OPTION COMPONENTS
BOTTOM VIEW

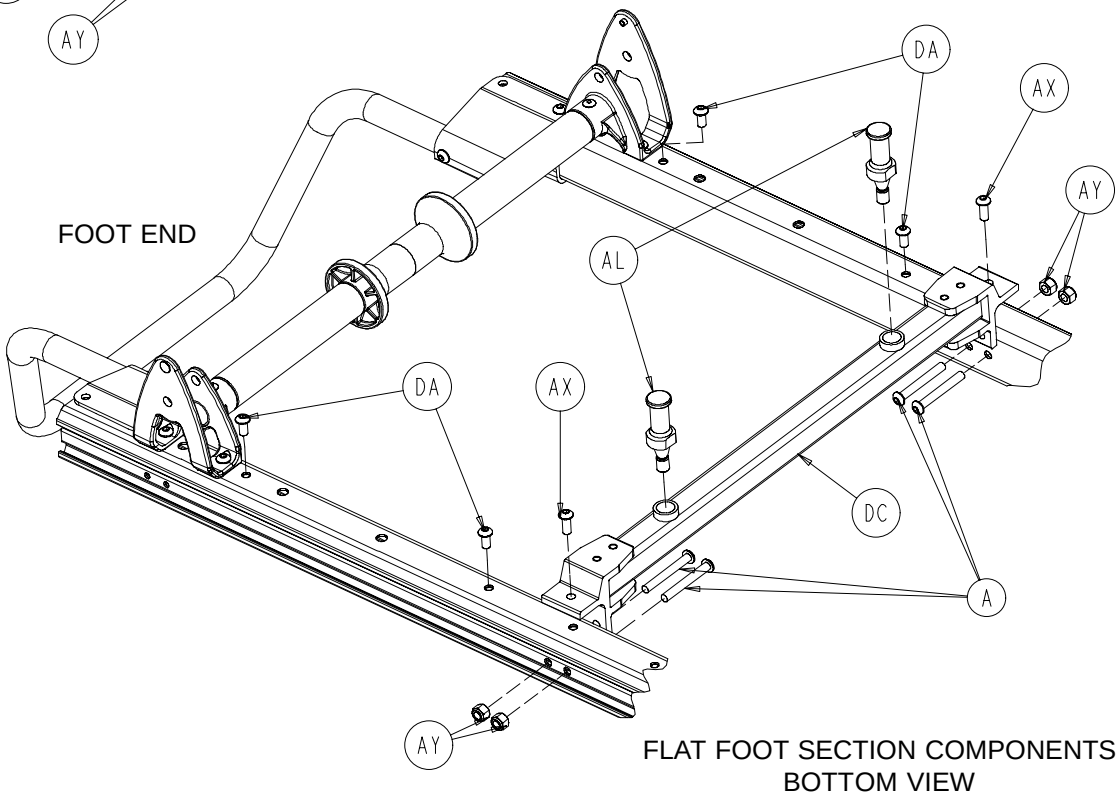

FLAT FOOT SECTION COMPONENTS
BOTTOM VIEW

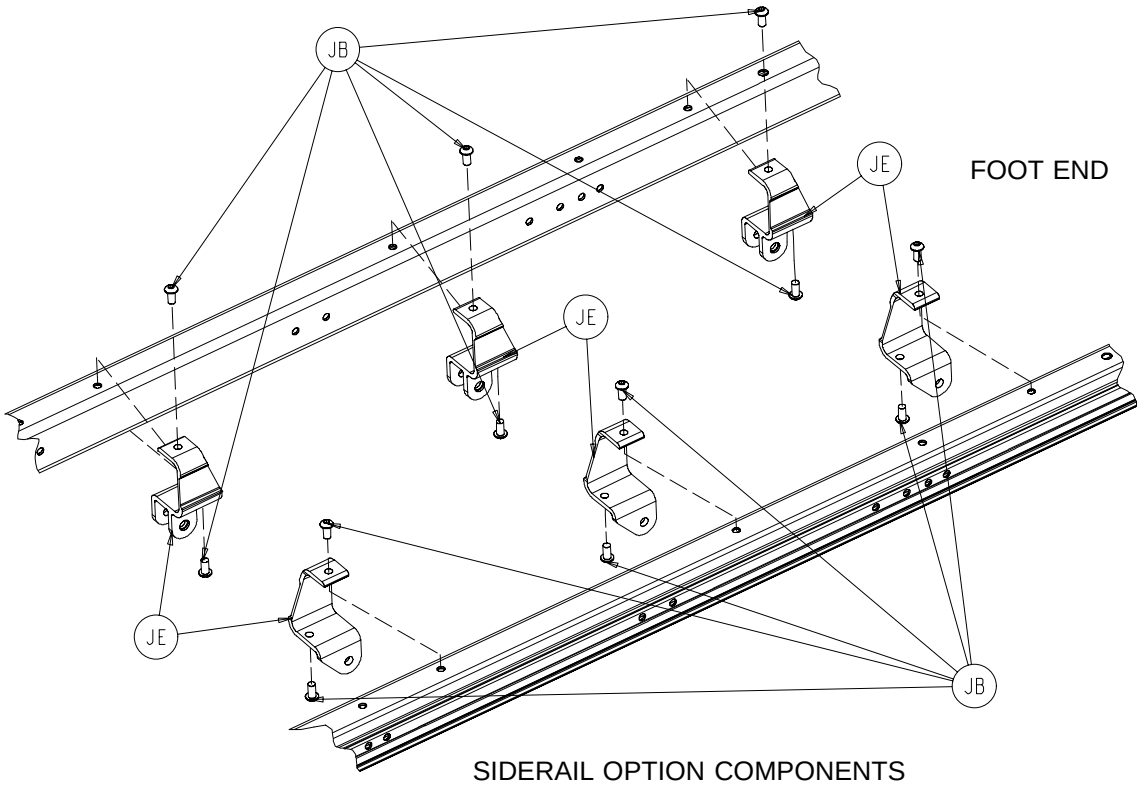

SIDERAIL OPTION COMPONENTS
BOTTOM VIEW

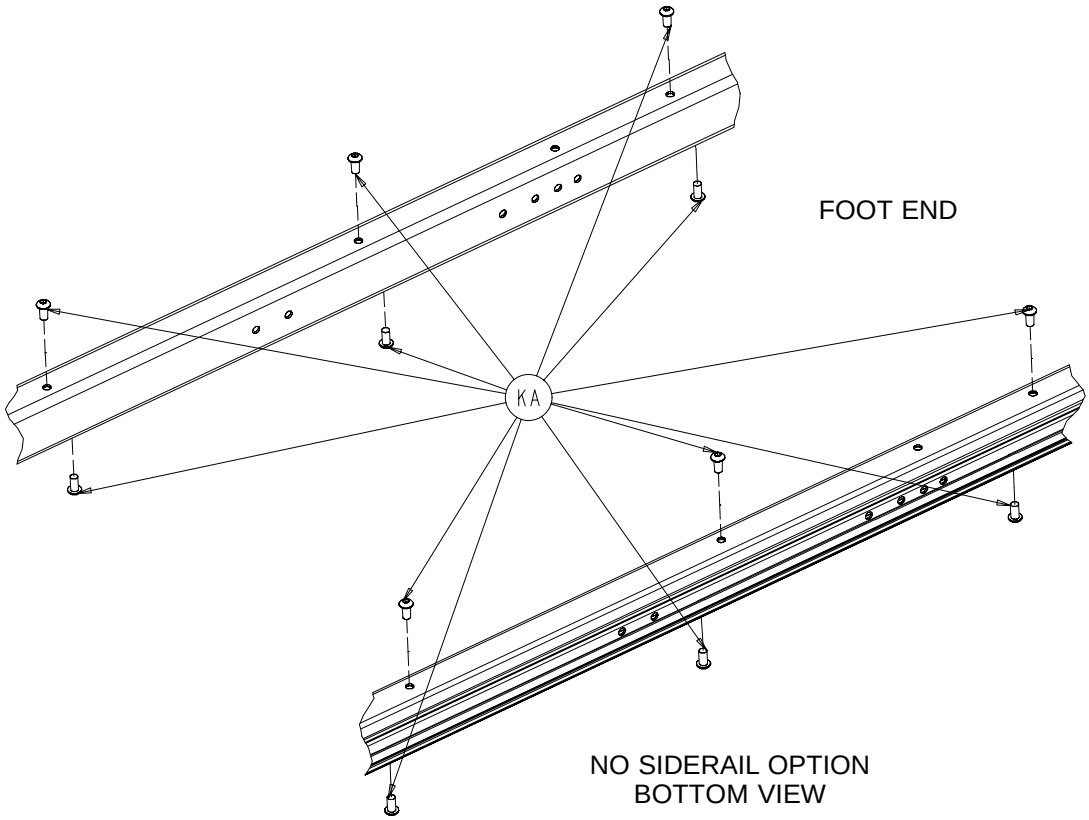

NO SIDERAIL OPTION
BOTTOM VIEW

Litter Assembly and Options

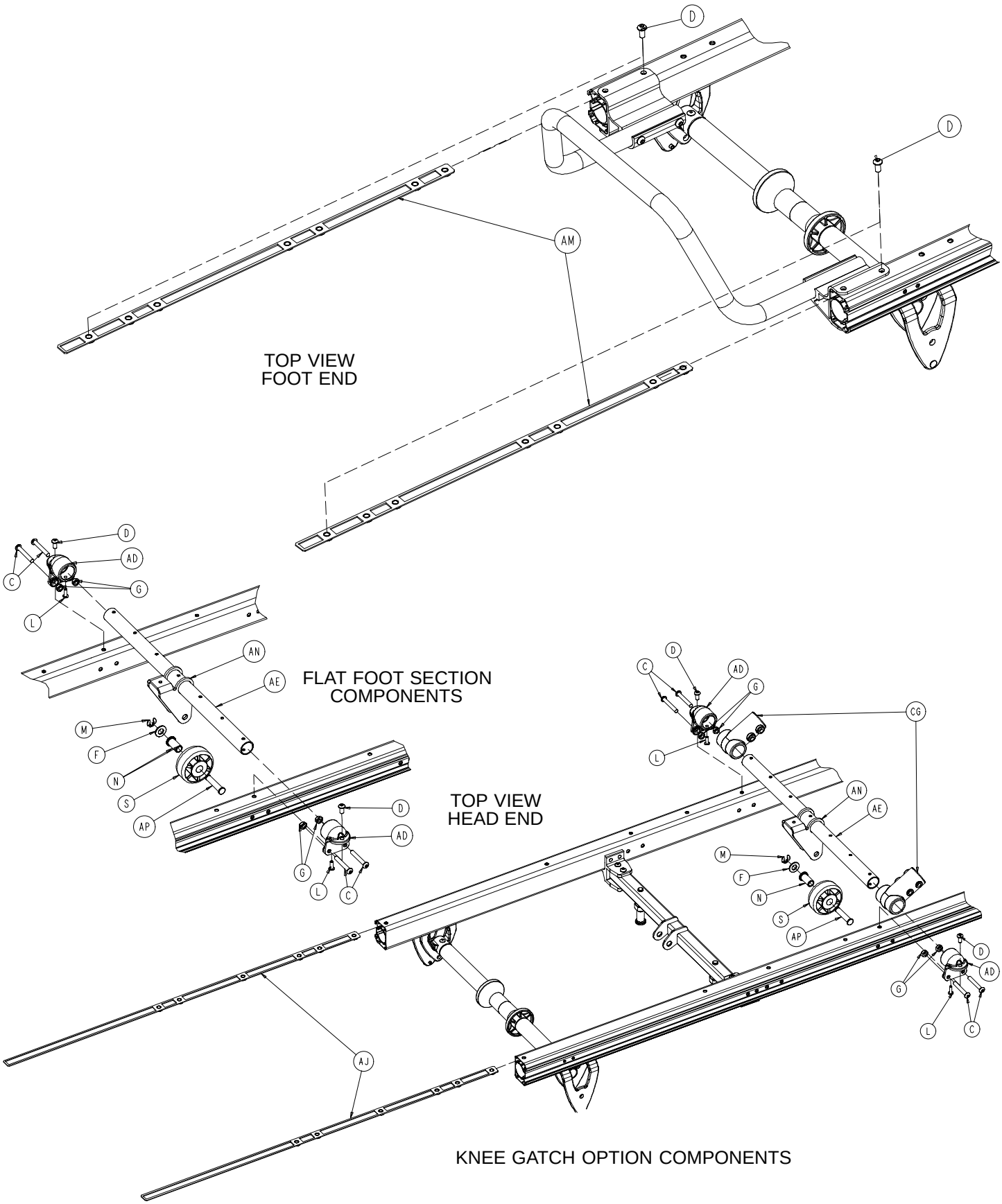

Litter Assembly and Options

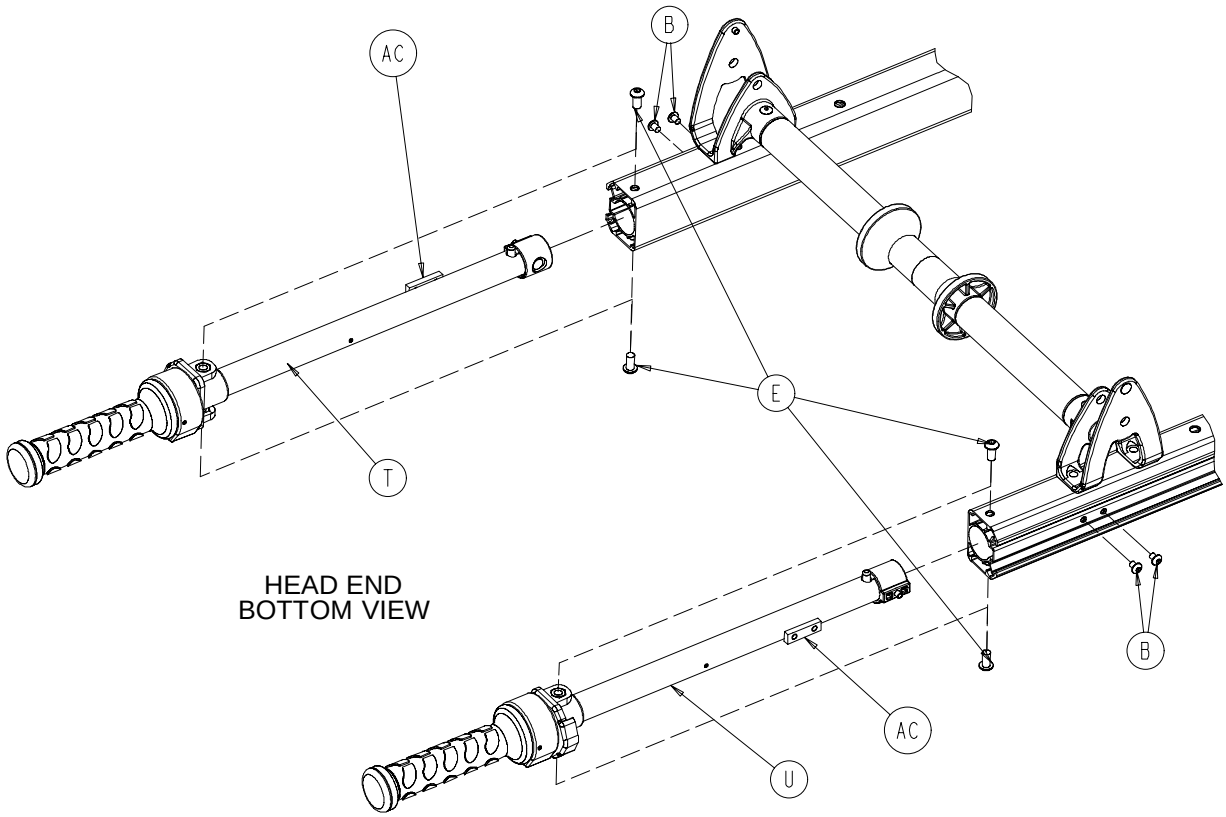

HEAD END
BOTTOM VIEW

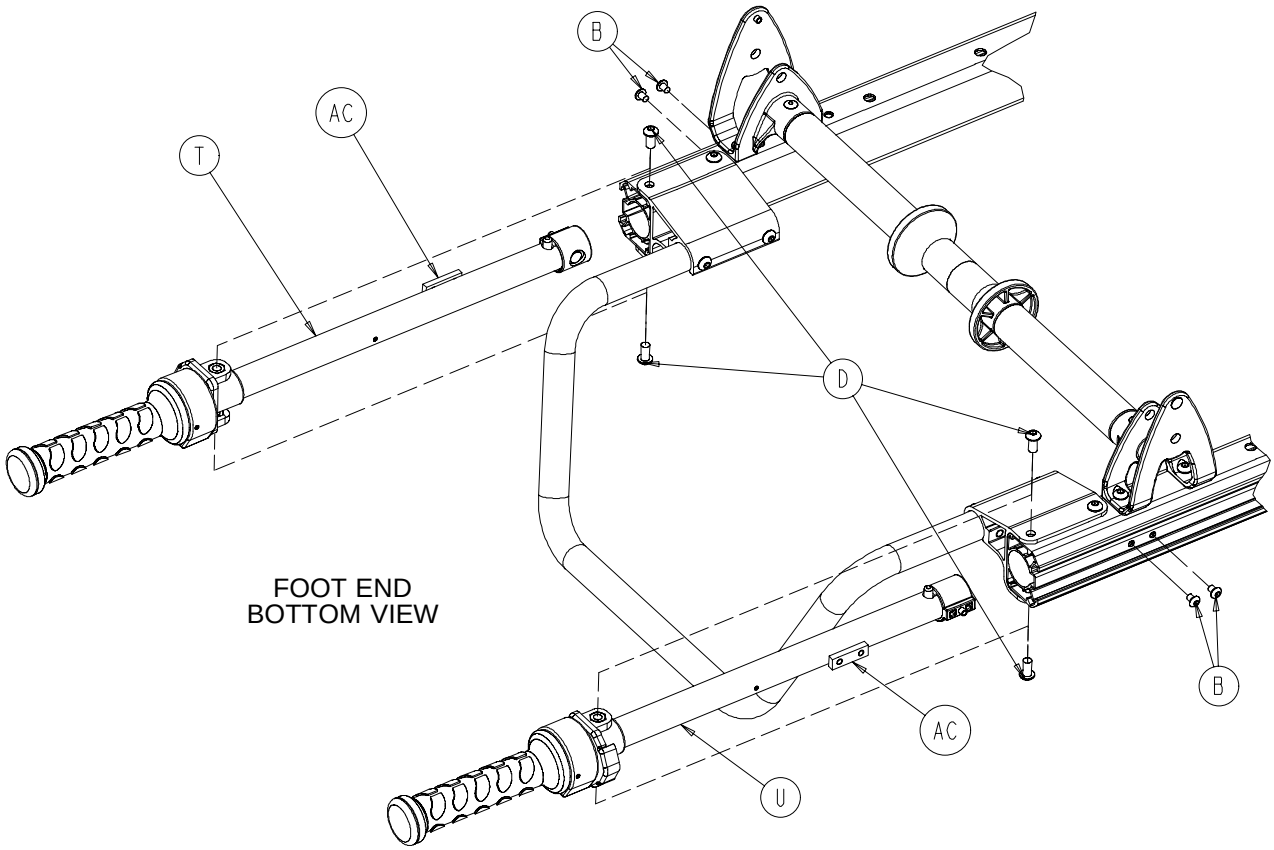

FOOT END
BOTTOM VIEW

Litter Assembly and Options

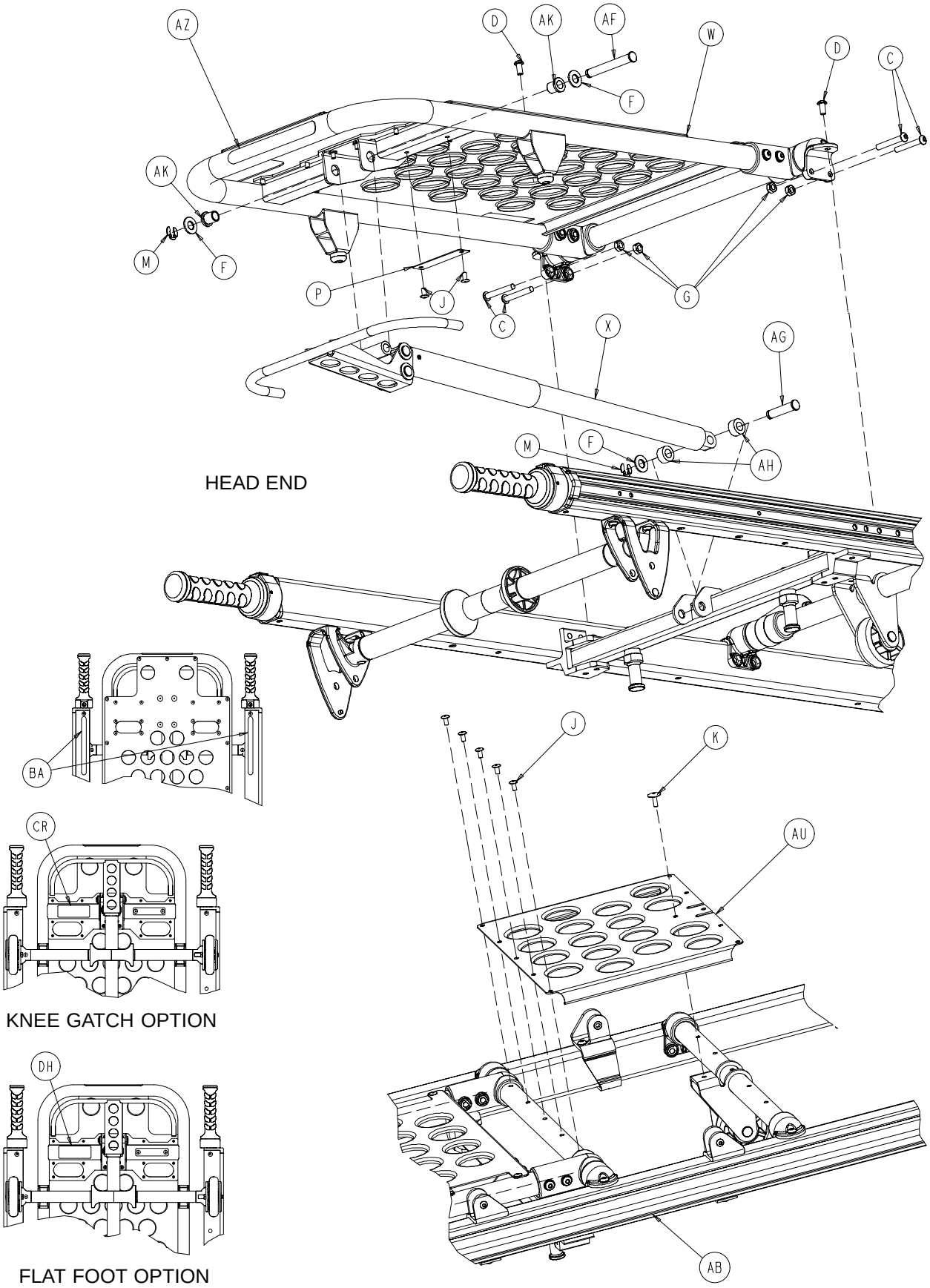

Litter Assembly and Options

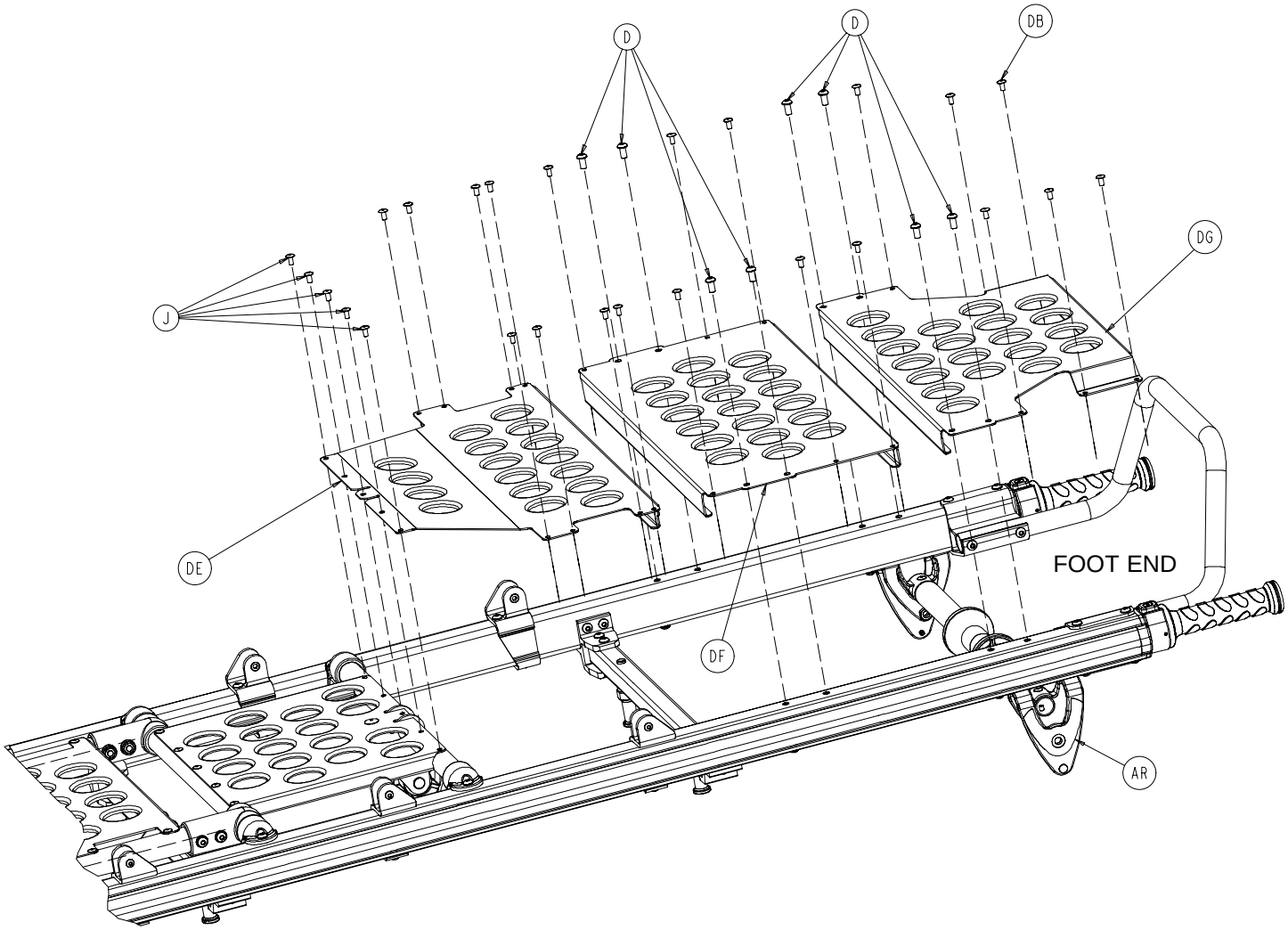

Litter Assembly and Options

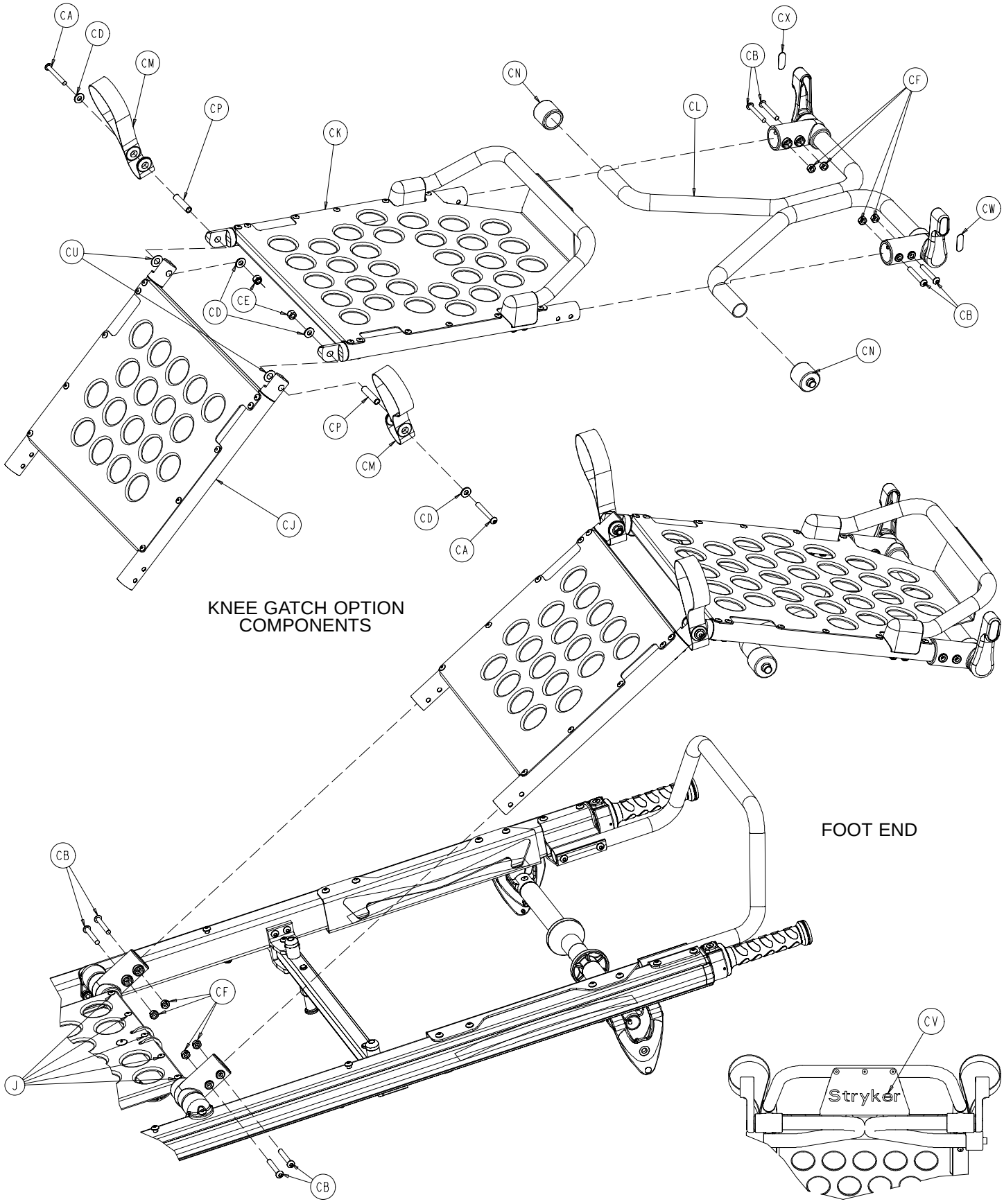

Litter Assembly and Options

NO DIN LOCK DOWN PIN OPTION

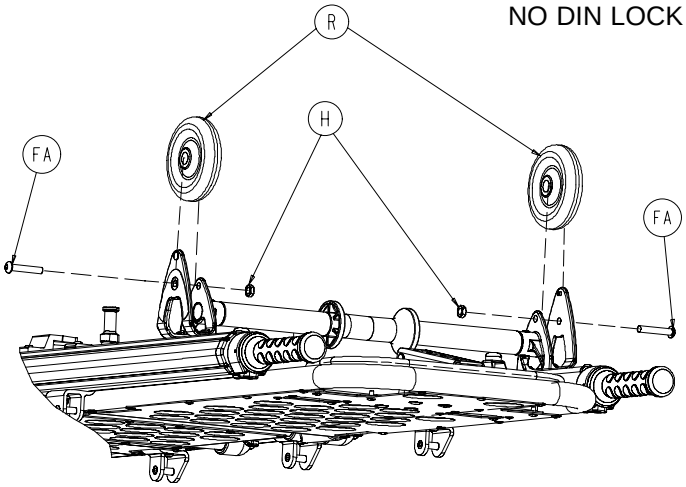

HEAD END
BOTTOM VIEW

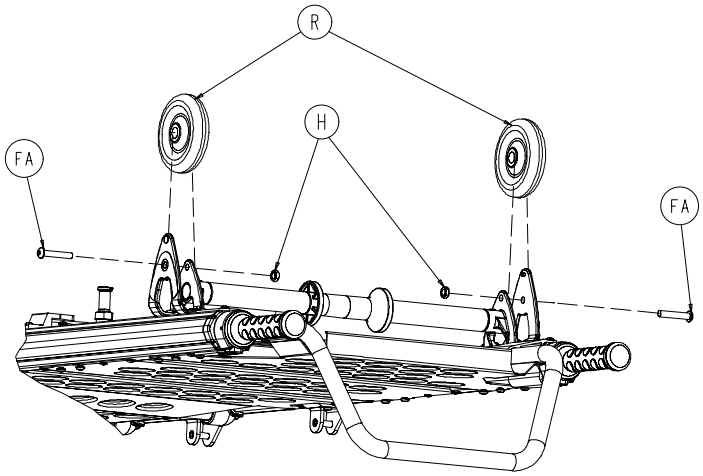

FOOT END
BOTTOM VIEW

DIN LOCK DOWN PIN OPTION

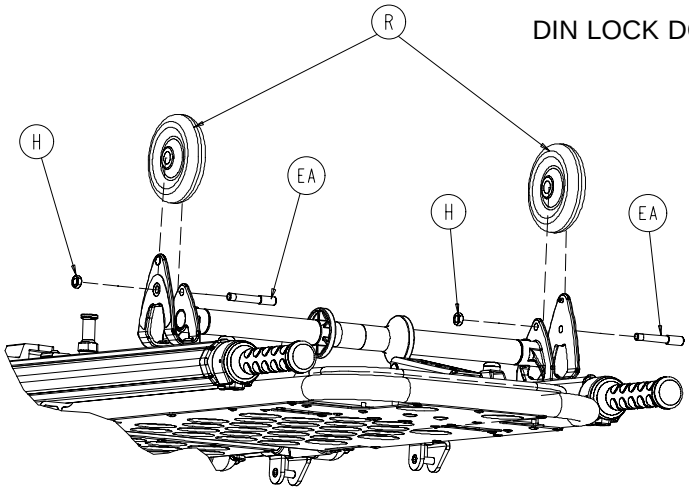

HEAD END
BOTTOM VIEW

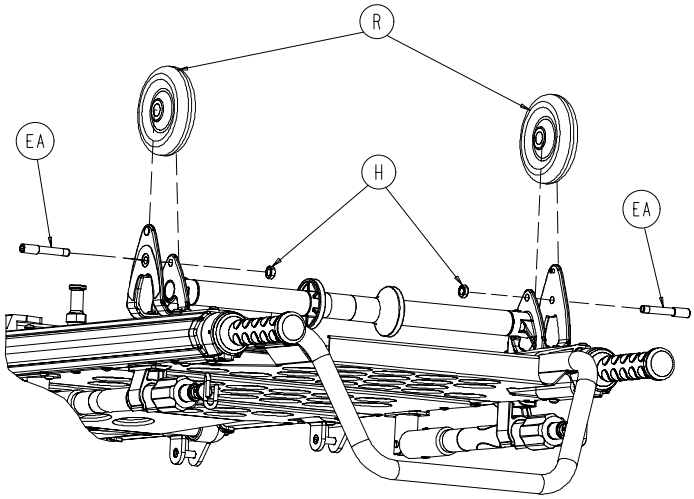

FOOT END
BOTTOM VIEW

Litter Assembly and Options

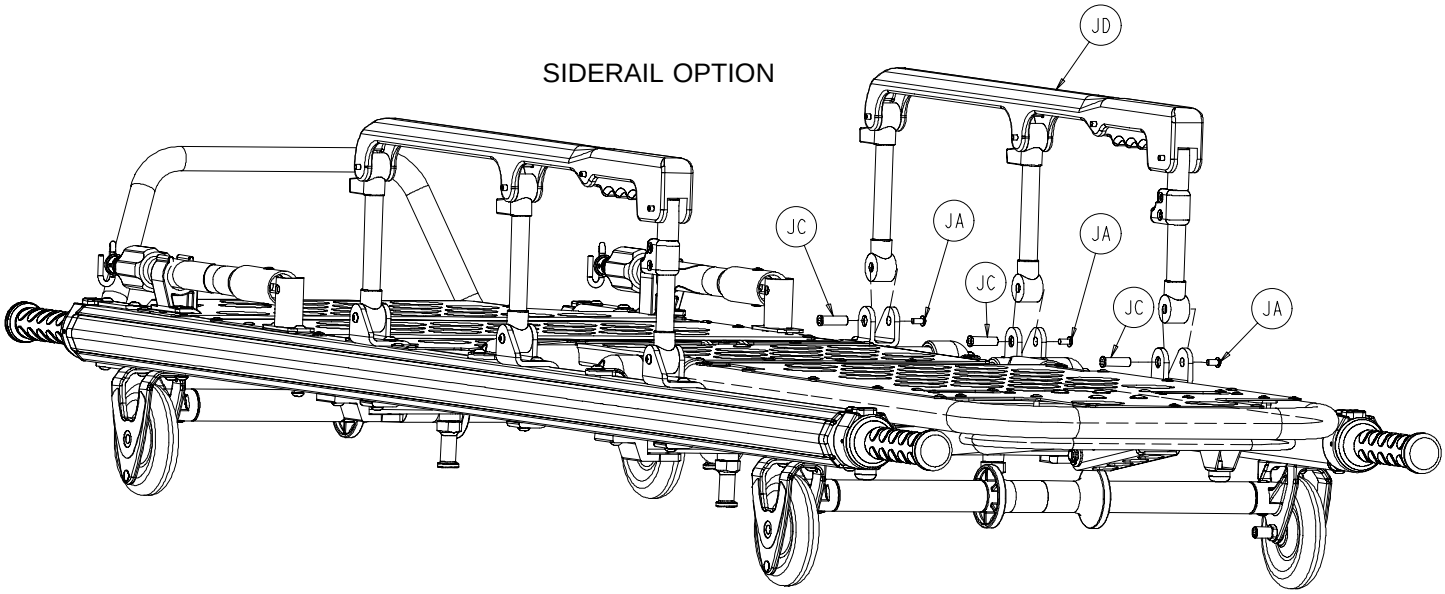

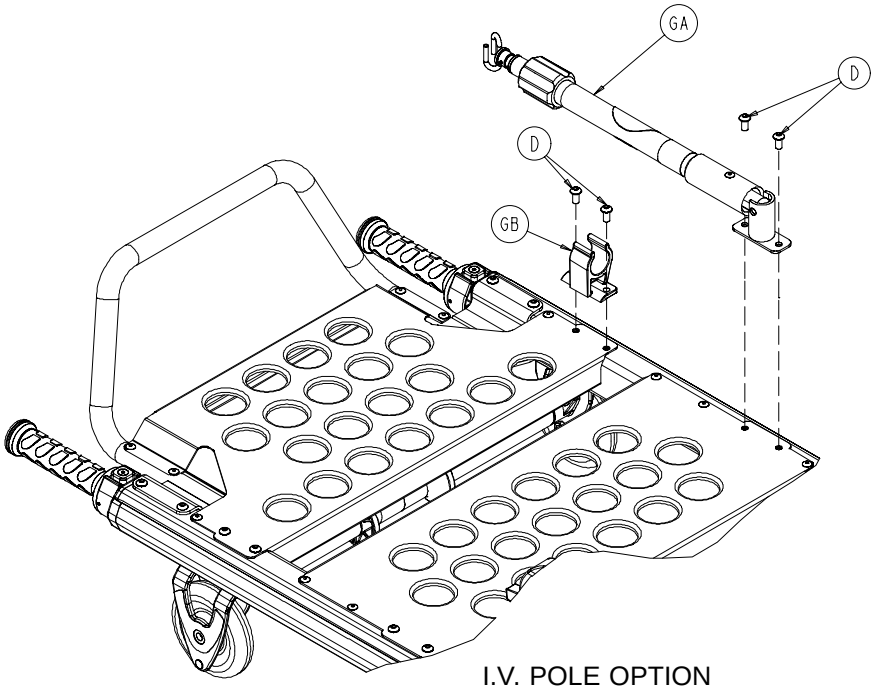

I.V. POLE OPTION
PATIENT RIGHT SIDE

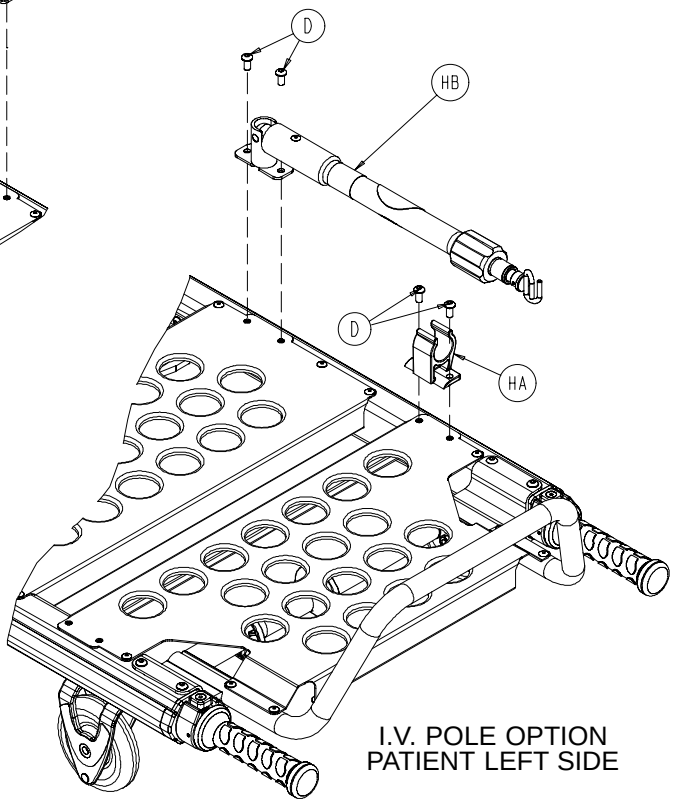

I.V. POLE OPTION
PATIENT LEFT SIDE

LITTER COMMON COMPONENTS – PART NUMBER 6100–31–11 (REFERENCE ONLY)

Item	Part No.	Part Name	Qty.	Item	Part No.	Part Name	Qty.
A	4–97	H. Soc. But. Hd. Cap Scr.	8	AB	6100–31–77	Outer Rail Bumper	2
B	4–483	H. Soc. But. Hd. Cap Scr.	8	AC	6100–31–79	Hand Grip Ext. Stop	4
C	4–204	Button Hd. Cap Screw	8	AD	6100–31–86	Mid Support	2
D	4–325	Soc. Hd. Cap Screw	28	AE	6100–31–87	Mid Support Tube	1
E	4–497	H. Soc. But. Hd. Cap Scr.	4	AF	6100–31–97	Clevis Pin	1
F	14–95	Washer	4	AG	6100–31–99	Clevis Pin	1
G	16–78	Hex Nut	8	AH	6100–31–100	Cylinder Spacer	2
H	16–316	Centerlock Hex Nut	4	AJ	6100–31–114	Hd. End Top Nut Strip	2
J	25–79	Blind Rivet	12	AK	6100–31–119	Fowler Bushing	2
K	25–128	Blind Rivet	1	AL	6100–31–120	Retaining Post	4
L	25–133	Blind Rivet	2	AM	6100–31–124	Ft. End Top Nut Strip	2
M	28–181	Truarc Ring	3	AN	6100–31–126	Roller Bracket	1
N	6100–3–76	Bearing	1	AP	6100–31–127	Clevis Pin	1
P	6060–90–2	Serial Number Tag	1	AR	6100–200–4	Reflective Label	4
R	6100–3–113	Wheel	4	AS	6100–231–75	Outer Rail, Right	1
S	6100–3–151	Base Load Wheel, Ft. End	1	AT	6100–231–76	Outer Rail, Left	1
T	(page 42)	Hand Grip Extension, #1	2	AU	6100–231–95	Mid Skin	1
U	(page 43)	Hand Grip Extension, #2	2	AV	6100–231–115	Hd. End Bottom Nut Strip	2
W	(page 44 & 45)	Back Rest Assembly	1	AW	6100–231–125	Ft. End Bottom Nut Strip	2
X	(page 46)	Back Rest Release Ass'y	1	AX	4–156	Soc. But. Hd. Cap Screw	4
Y	(page 47)	Wheel X–Support Ass'y	2	AY	16–28	Nylock Hex Nut	8
Z	(page 48)	Head End Latch Tube	1	AZ	6060–90–4	Small Rugged Label	1
AA	(page 49)	Push Bar Assembly	1	BA	6080–90–106	Weight Label	2

KNEE GATCH OPTION ASSEMBLY – PART NUMBER 6100–31–10 (REFERENCE ONLY)

Item	Part No.	Part Name	Qty.	Item	Part No.	Part Name	Qty.
CA	4–97	H. Soc. But. Hd. Cap Scr.	2	CM	6100–31–96	Trend Lift Strap	2
CB	4–204	Button Hd. Cap Screw	8	CN	6100–31–104	Trend Roller	2
CC	4–325	Soc. Hd. Cap Screw	4	CP	6100–31–116	Knee Pivot Spacer	2
CD	11–77	Washer	4	CR	6100–200–5	Knee Gatch Litter Label	1
CE	16–28	Hex Nut	2	CS	6100–231–91	Trend Supt. Rack, Rt.	1
CF	16–78	Hex Nut	8	CT	6100–231–92	Trend Supt. Rack, Lt.	1
CG	6100–3–125	Straight Pivot	2	CU	14–20	Nylon Washer	2
CH	(page 50)	Knee Gatch Latch Tube	1	CV	946–201–60	Stryker Logo Label	1
CJ	(page 51)	Thigh Section Assembly	1	CW	6100–200–2	Gatch Release Label	1
CK	(page 52 & 53)	Foot Section Ass'y	1	CX	6100–200–3	Gatch Release Label	1
CL	(page 54)	Trend Tube Assembly	1				

FLAT FOOT OPTION ASSEMBLY – PART NUMBER 6100–33–10 (REFERENCE ONLY)

Item	Part No.	Part Name	Qty.	Item	Part No.	Part Name	Qty.
DA	4–497	But. Hd. Cap Screw	4	DF	6100–33–61	Flat Foot Section Skin	1
DB	25–79	Blind Rivet	20	DG	6100–33–62	Flat Foot Section Skin	1
DC	(page 55)	Flat Foot Latch Tube	1	DH	6100–200–6	Flat Foot Litter Label	1
DE	6100–33–60	Flat Foot Section Skin	1				

Litter Assembly and Options

DIN LOCK DOWN PIN OPTION – P/N 6100–42

Item	Part No.	Part Name	Qty.
EA	6100–42–60	DIN Lock Pin	4

NO DIN LOCK DOWN PIN OPTION – P/N 6100–43

Item	Part No.	Part Name	Qty.
FA	4–54	H. Soc. But. Hd. Cap Scr.	4

I.V. POLE OPTION, RIGHT – P/N 6100–115

Item	Part No.	Part Name	Qty.
GA	(page 57)	3–Stage I.V., Right	1
GB	6100–115–60	I.V. Clip	1

I.V. POLE OPTION, LEFT – P/N 6100–116

Item	Part No.	Part Name	Qty.
HA	6100–115–60	I.V. Clip	1
HB	(page 57)	3–Stage I.V., Left	1

SIDERAIL OPTION – P/N 6100–20

Item	Part No.	Part Name	Qty.
JA	4–136	But. Hd. Cap Screw	6
JB	4–325	But. Hd. Cap Screw	12
JC	721–26–66	Pivot Screw	6
JD	(page 56)	Siderail Assembly	2
JE	6100–31–85	Siderail Pivot Mount	6

NO SIDERAIL OPTION – P/N 6100–21

Item	Part No.	Part Name	Qty.
KA	4–497	But. Hd. Cap Screw	12

6100–31–12 Litter Hand Grip Extension Assembly #1

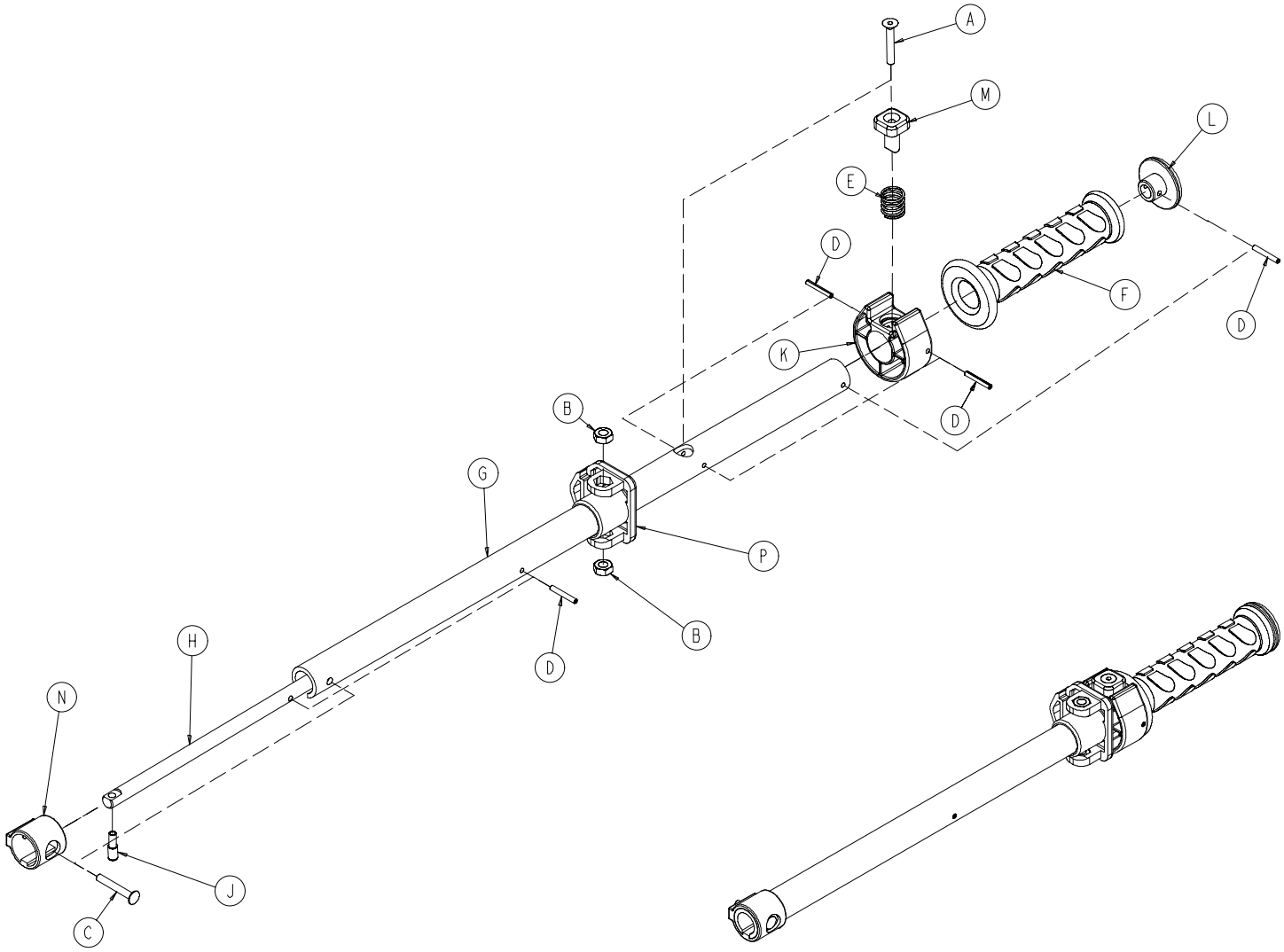

Item	Part No.	Part Name	Qty.
A	1–138	Flat Countersunk Hd. Cap Screw	1
B	16–78	Hex Nut	2
C	25–106	Semi–Tubular Rivet	1
D	26–312	Coiled Spring Pin	4
E	38–462	Compression Spring	1
F	6080–40–11	Grip	1
G	6100–31–60	Handle Extension Support Tube	1
H	6100–31–61	Handle Extension Pivot Lock Lever	1
J	6100–31–62	Extension Handle Lock Pin	1
K	6100–31–63	Handle Extension Collar	1
L	6100–31–64	Handle Extension Retaining Plug	1
M	6100–31–65	Handle Extension Push Button	1
N	6100–31–66	Handle Extension Tube Bushing	1
P	6100–231–78	Extrusion End Cap	1

6100–31–13 Litter Hand Grip Extension Assembly #2

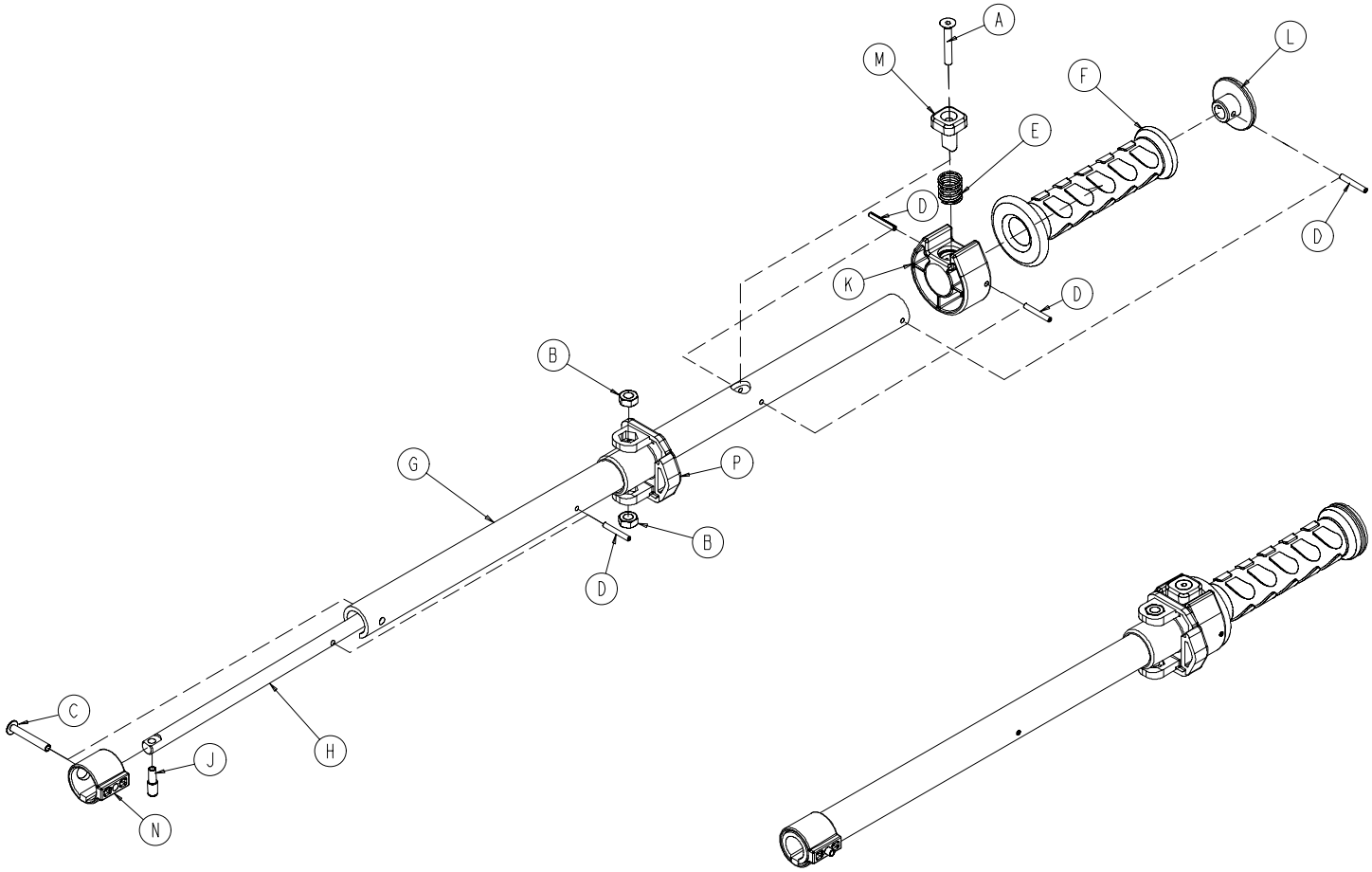

Item	Part No.	Part Name	Qty.
A	1–138	Flat Countersunk Hd. Cap Screw	1
B	16–78	Hex Nut	2
C	25–106	Semi–Tubular Rivet	1
D	26–312	Coiled Spring Pin	4
E	38–462	Compression Spring	1
F	6080–40–11	Grip	1
G	6100–31–60	Handle Extension Support Tube	1
H	6100–31–61	Handle Extension Pivot Lock Lever	1
J	6100–31–62	Extension Handle Lock Pin	1
K	6100–31–63	Handle Extension Collar	1
L	6100–31–64	Handle Extension Retaining Plug	1
M	6100–31–65	Handle Extension Push Button	1
N	6100–31–66	Handle Extension Tube Bushing	1
P	6100–231–78	Extrusion End Cap	1

Back Rest Assembly

Assembly part number 6100–31–14
(reference only)

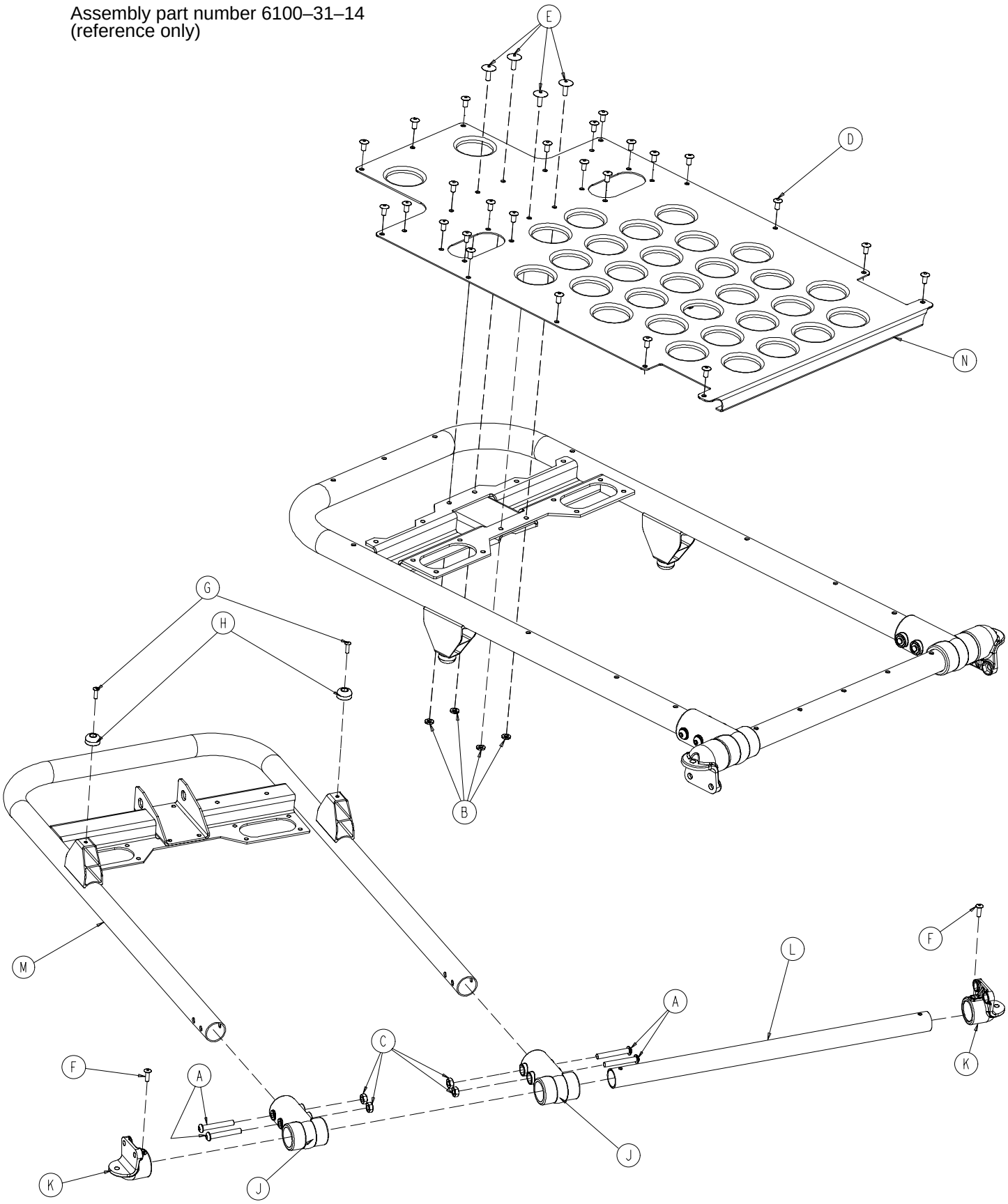

Back Rest Assembly

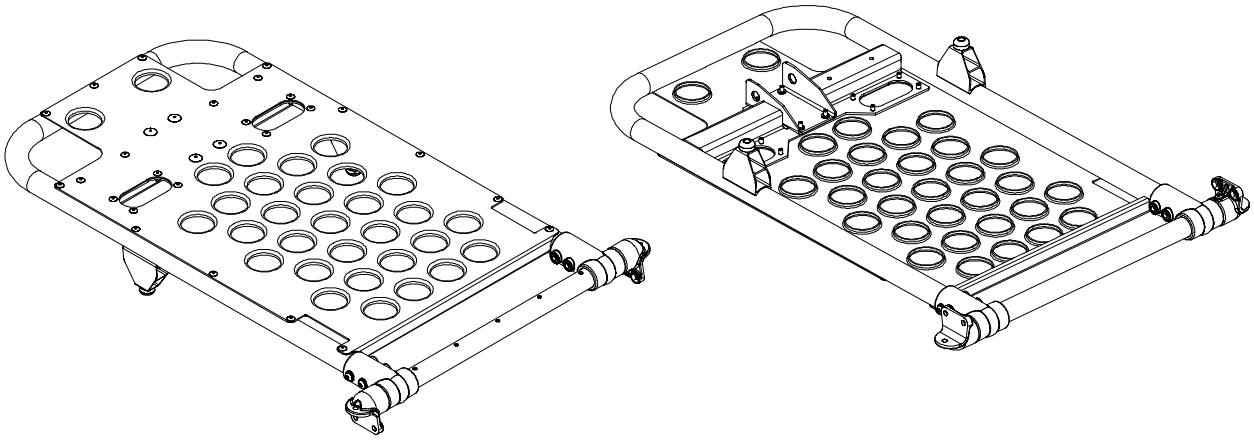

Item	Part No.	Part Name	Qty.
A	4–204	But. Hd. Cap Screw	4
B	11–454	Washer	4
C	16–78	Hex Nut	4
D	25–79	Blind Rivet	25
E	25–128	Blind Rivet	4
F	25–133	Blind Rivet	2
G	25–157	Blind Rivet	2
H	56–19	Bumper	2
J	6100–3–125	Straight “T” Pivot	2
K	6100–31–86	Mid–Support	1
L	6100–31–87	Mid–Support Tube	1
M	6100–231–50	Fowler Tube	1
N	6100–231–70	Fowler Skin	1

6100–31–15 Back Rest Release Assembly

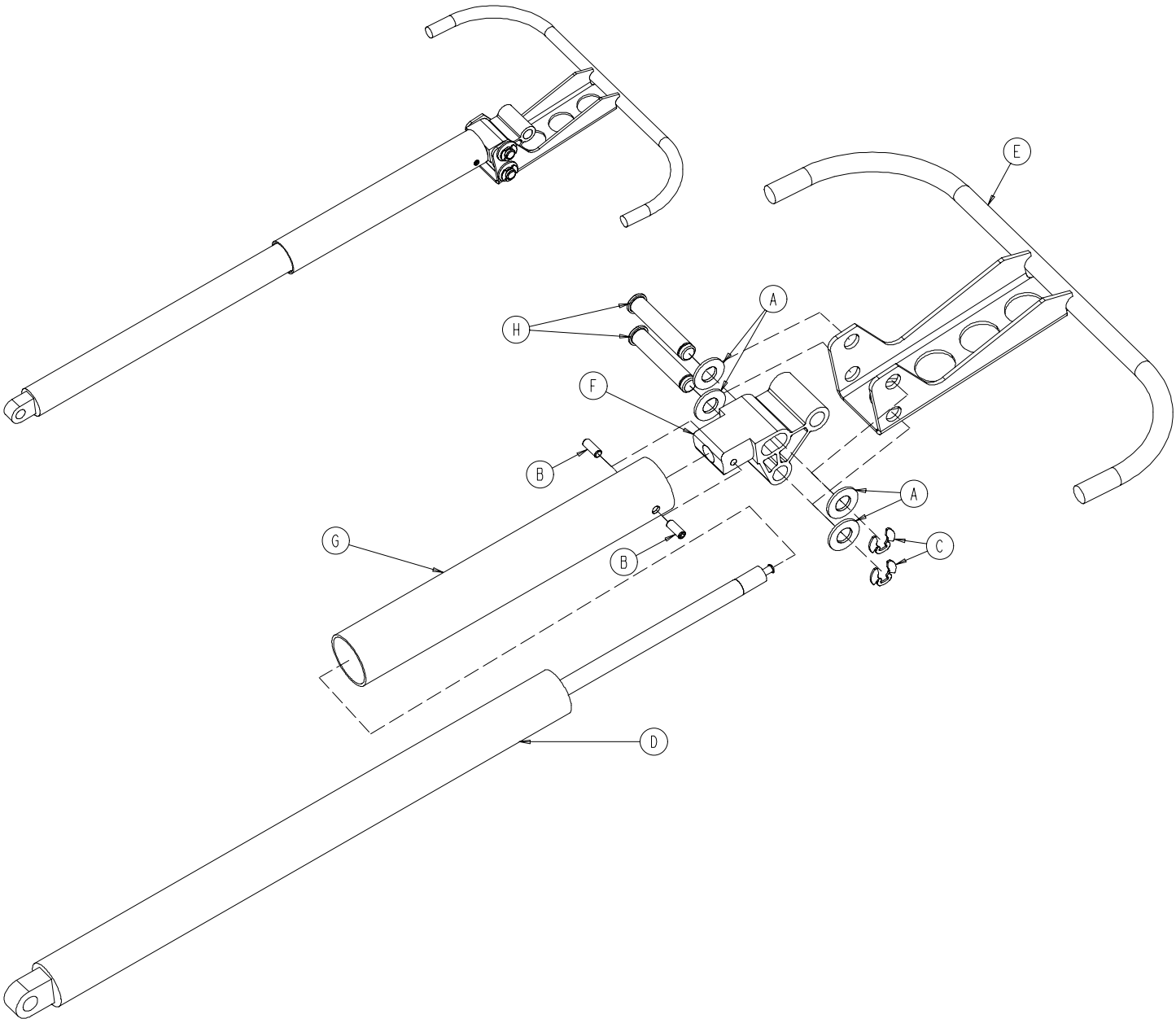

Item	Part No.	Part Name	Qty.
A	14–95	Washer	4
B	21–158	Set Screw	2
C	28–181	Retaining Ring	2
D	360–31–77	Pneumatic Cylinder	1
E	6100–31–51	Fowler Activator Weldment	1
F	6100–31–101	Fowler Cylinder Extrusion	1
G	6100–31–103	Fowler Cylinder Shield	1
H	6100–31–117	Clevis Pin	2

Wheel X–Support Assembly

Assembly part number 6100–31–16
(reference only)

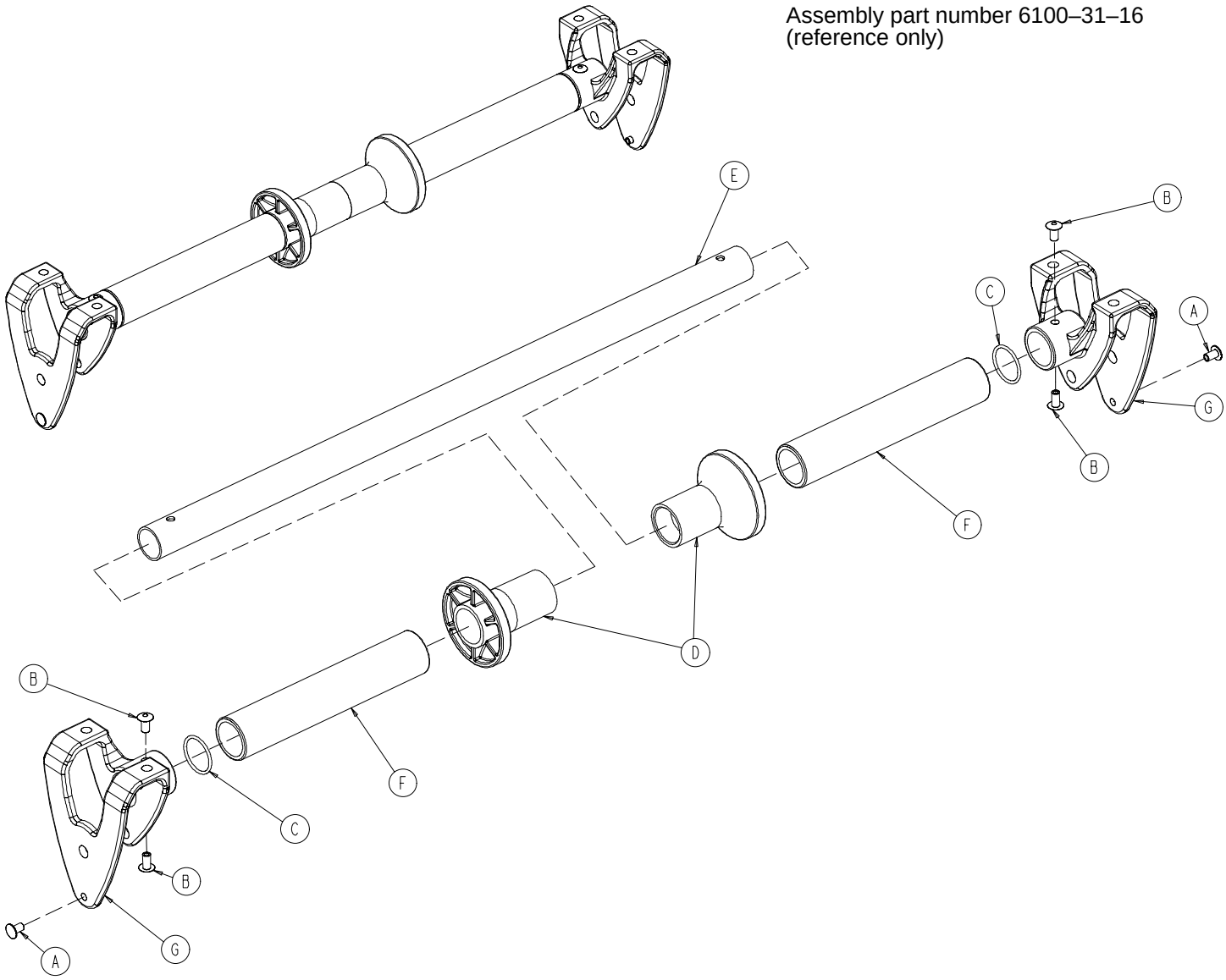

Item	Part No.	Part Name	Qty.
A	25–31	Semi–Tubular Rivet	2
B	25–79	Blind Rivet	4
C	45–241	O–Ring	2
D	6100–31–81	Base Attachment Roller	2
E	6100–31–83	Base Attachment Tube	1
F	6100–31–84	Base Attach. Roller Spcr. Tube	2
G	6100–231–180	Wheel Support	2

Head End Litter Latch Tube Assembly

Assembly part number 6100–31–17 (reference only)

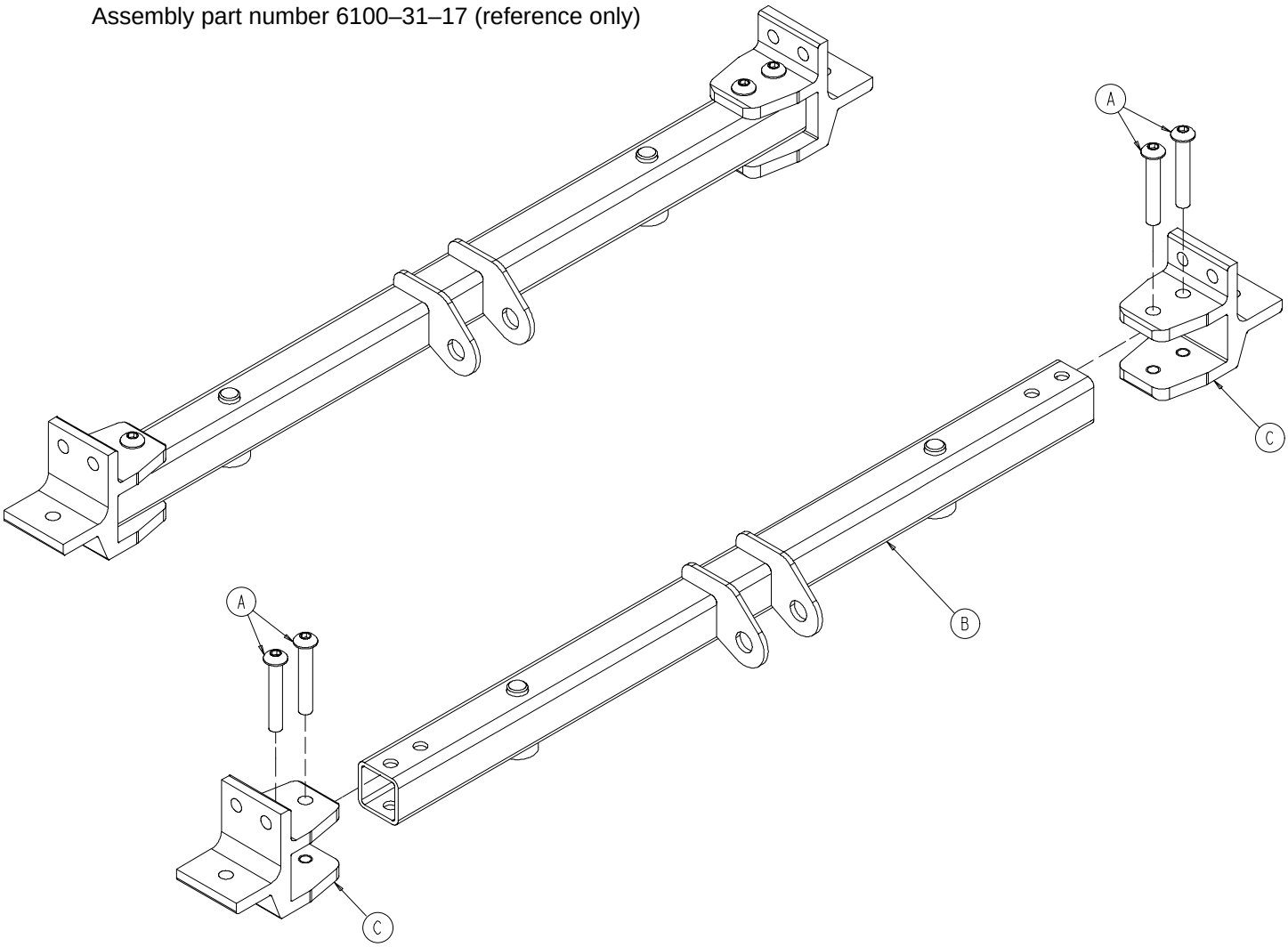

Item	Part No.	Part Name	Qty.
A	4–135	Button Hd. Cap Screw	4
B	6100–31–53	Litter Latch Tube Wldmt., Hd.	1
C	6100–31–123	Litter Lock Tube Extrusion	2

6100–31–18 Push Bar Assembly

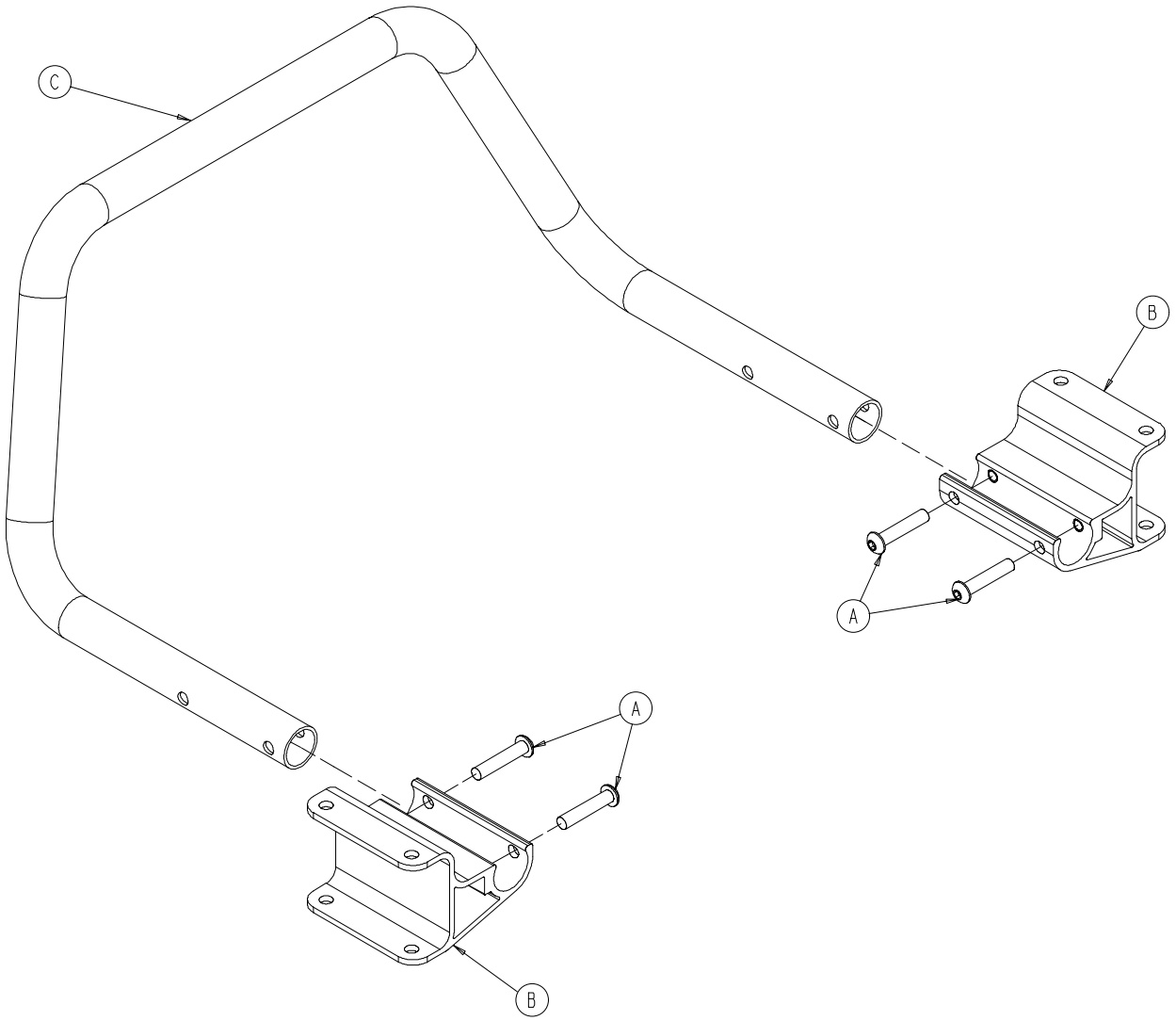

Item	Part No.	Part Name	Qty.
A	4–198	Button Hd. Cap Screw	4
B	6100–31–88	Push Tube Mount	2
C	6100–231–89	Foot End Push Tube	1

Knee Gatch Litter Foot End Latch Tube Assembly

Assembly part number 6100–31–19
(reference only)

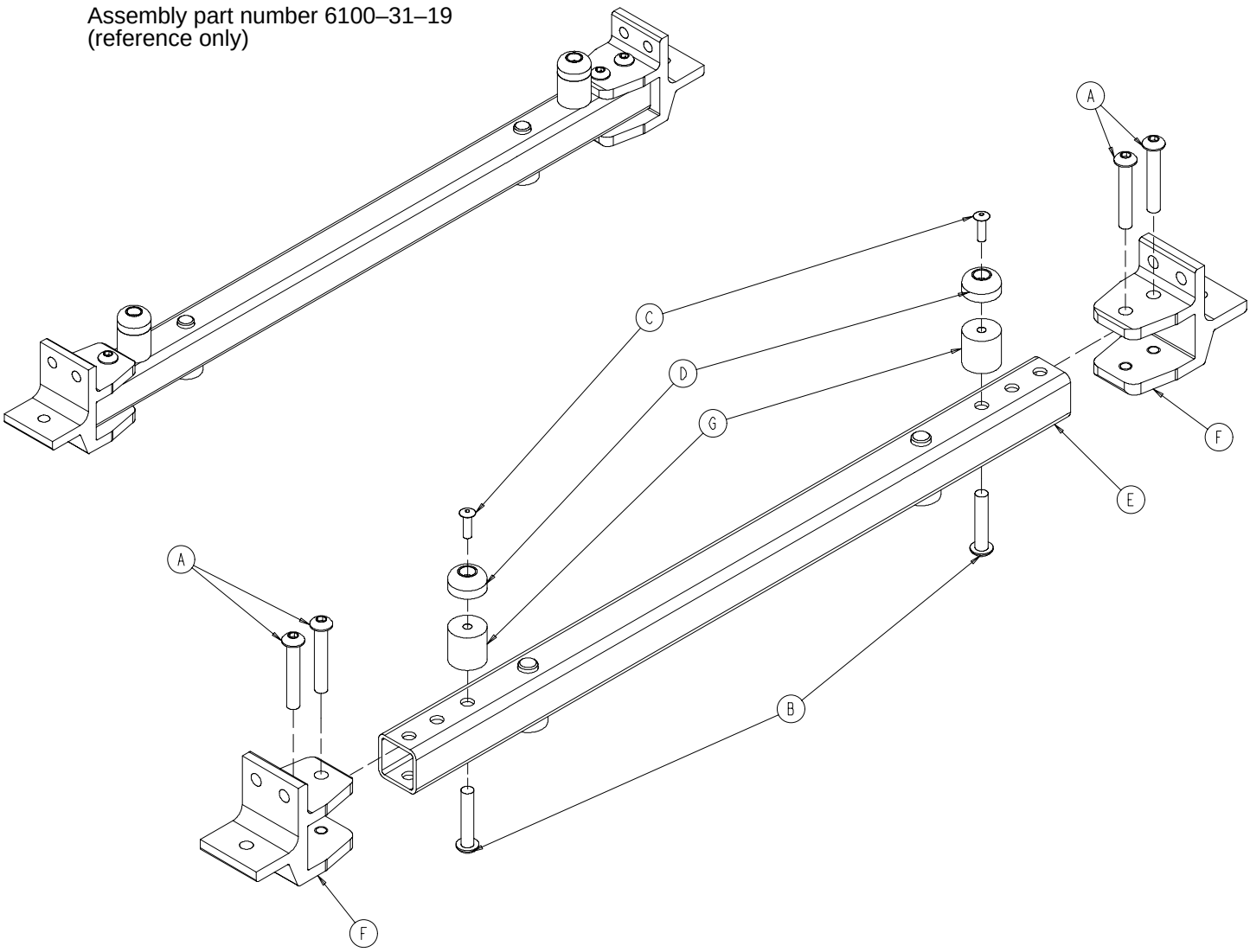

Item	Part No.	Part Name	Qty.
A	4–135	Button Hd. Cap Screw	4
B	4–198	Button Hd. Cap Screw	2
C	25–157	Blind Rivet	2
D	56–19	Bumper	2
E	6100–31–54	Litter Latch Tube Wldmt., Ft.	1
F	6100–31–123	Litter Lock Tube Extrusion	2
G	6100–31–128	Bumper Post	2

Knee Gatch Litter Thigh Section Assembly

Assembly part number 6100–31–20 (reference only)

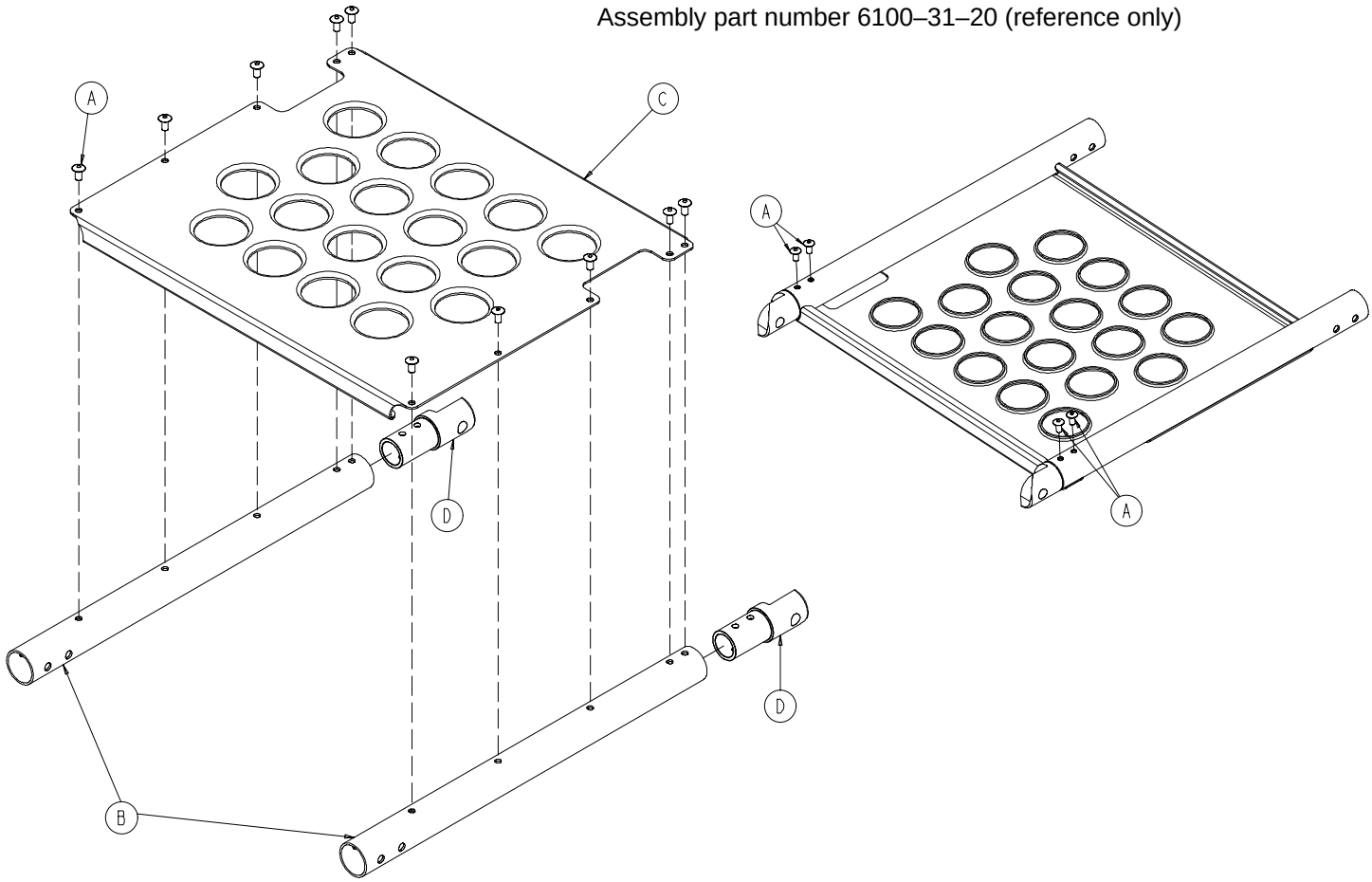

Item	Part No.	Part Name	Qty.
A	25–79	Blind Rivet	14
B	6100–31–106	Thigh Section Tube	2
C	6100–31–107	Thigh Section Skin	1
D	6100–31–108	Knee Pivot	2

Knee Gatch Litter Foot Section Assembly

Assembly part number 6100–31–21
(reference only)

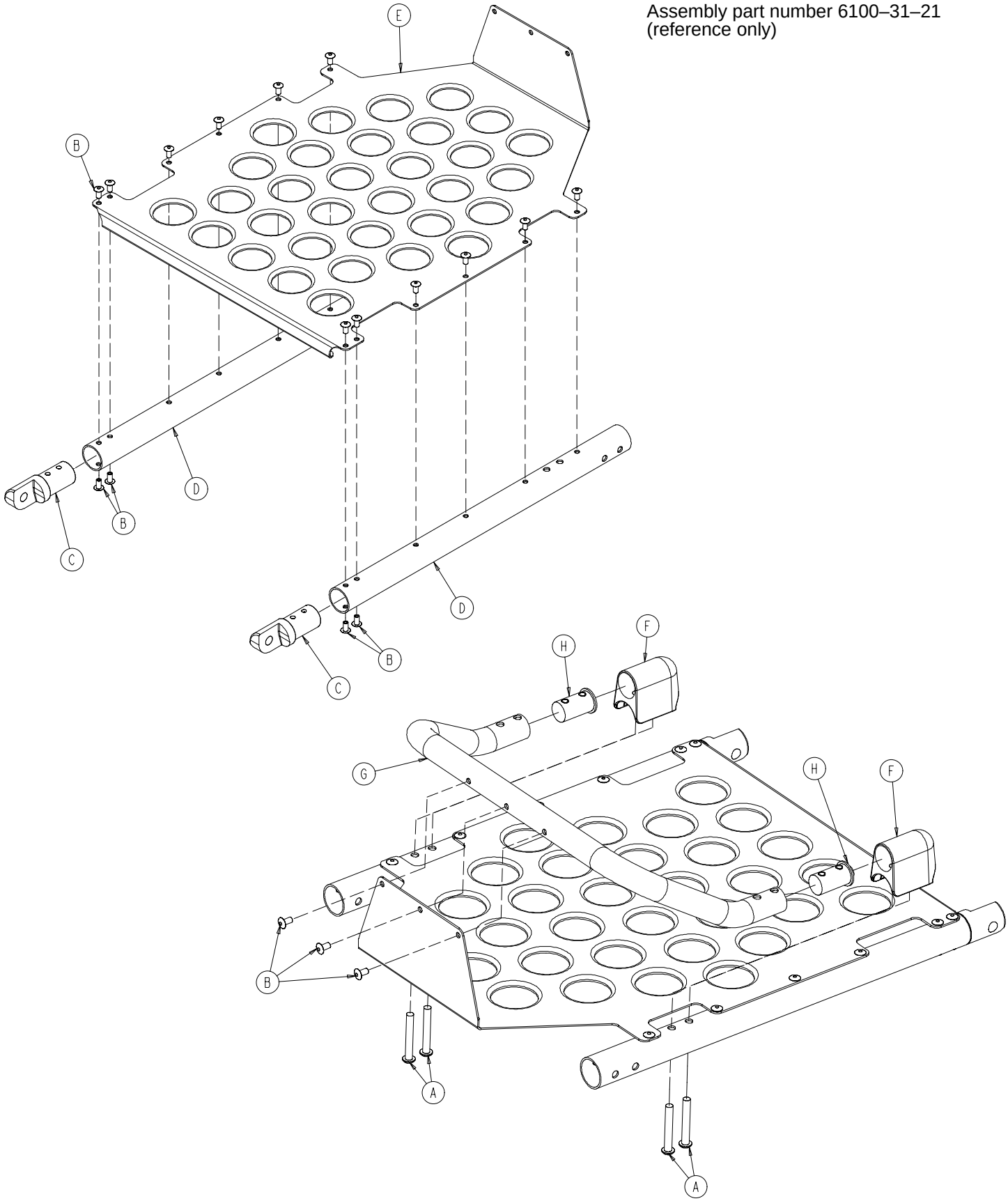

Knee Gatch Litter Foot Section Assembly

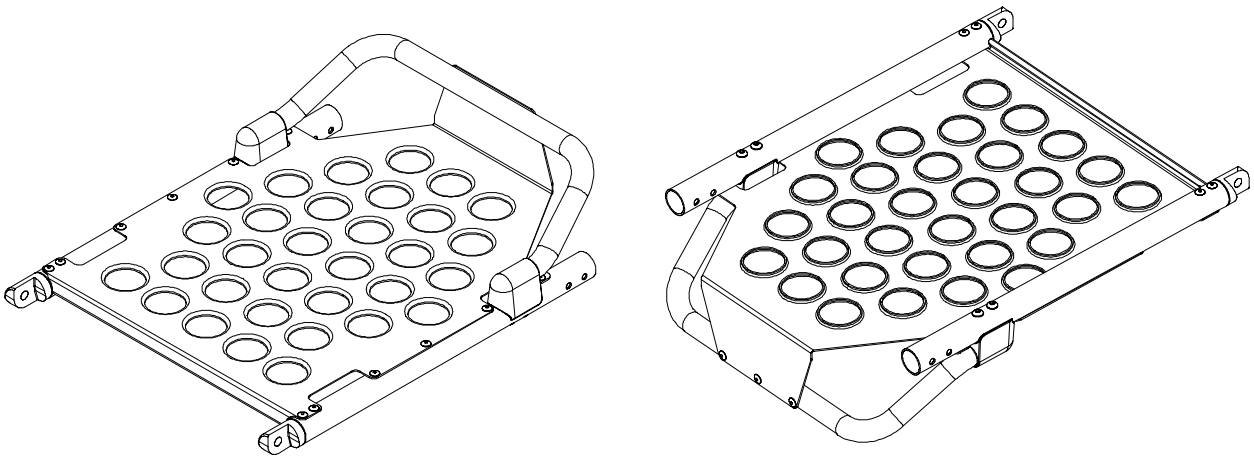

Item	Part No.	Part Name	Qty.
A	4–204	But. Hd. Cap Screw	4
B	25–79	Blind Rivet	19
C	6100–31–108	Knee Pivot	2
D	6100–31–109	Foot Section Tube	2
E	6100–31–110	Foot Skin	1
F	6100–31–111	Lift Tube End Cap	2
G	6100–31–112	Foot Lift Tube	1
H	6100–31–113	Trend Lift Tube Insert	2

Trend Tube Assembly

Assembly part number 6100–31–22 (reference only)

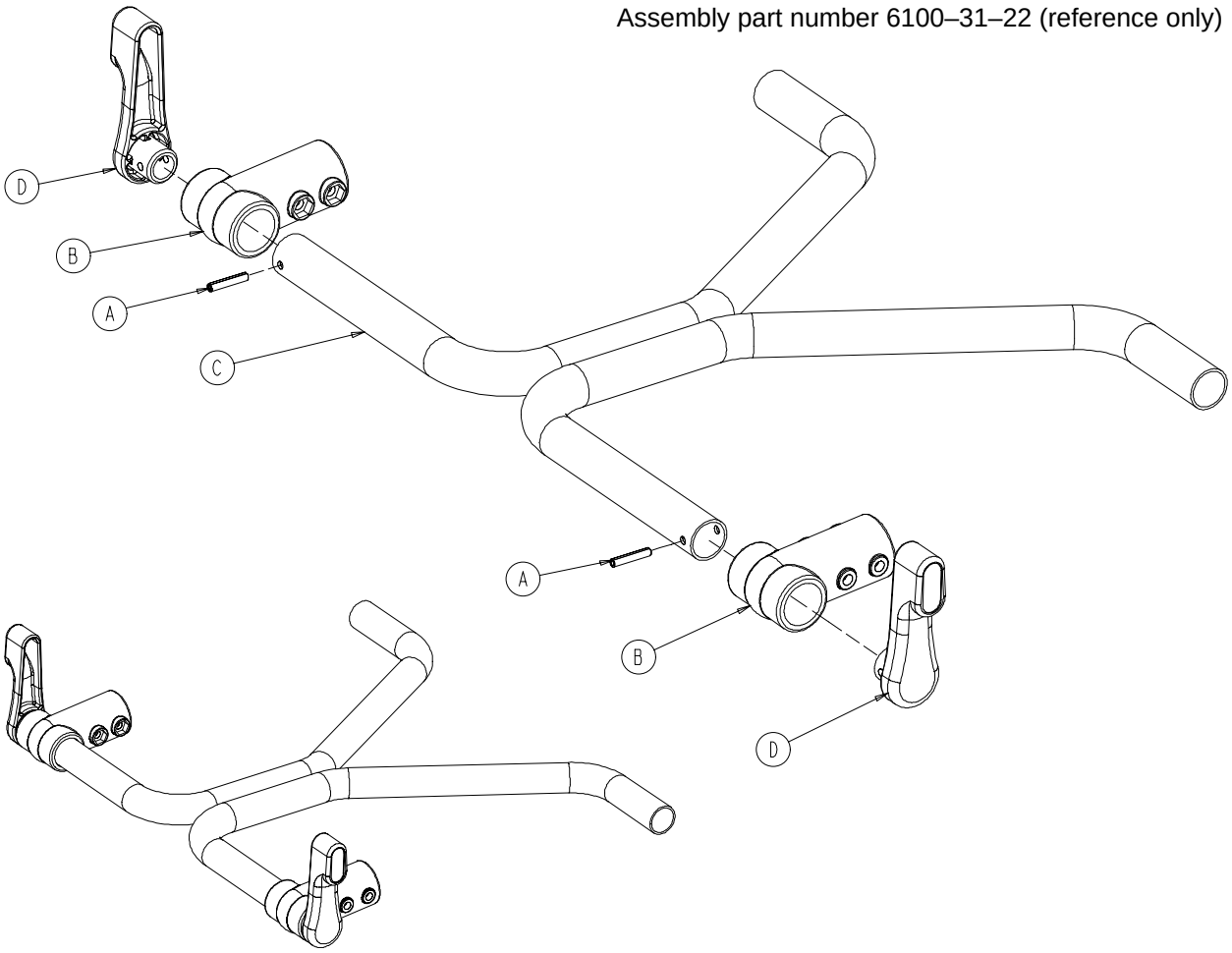

Item	Part No.	Part Name	Qty.
A	26–313	Coiled Spring Pin	2
B	6100–3–125	Straight “T” Pivot	2
C	6100–31–52	Trend Tube Weldment	1
D	6100–31–105	Gatch Release Pivot Handle	2

Flat Foot Litter Latch Tube Assembly, Foot End

Assembly part number 6100–33–11 (reference only)

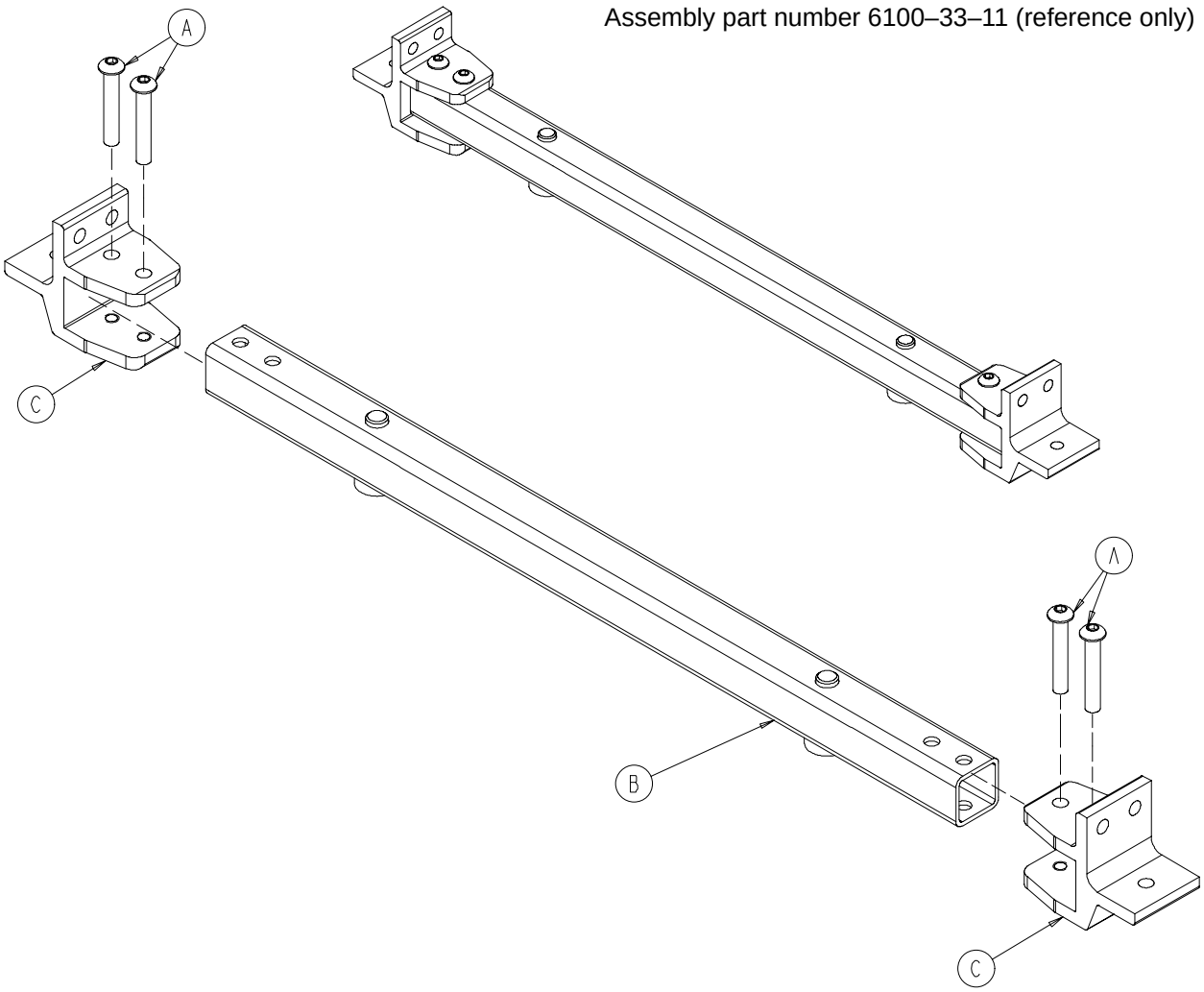

Item	Part No.	Part Name	Qty.
A	4–135	Button Hd. Cap Screw	4
B	6100–31–123	Litter Lock Tube Extrusion	2
C	6100–33–54	Flat Ft. Litter Latch Tube, Ft.	1

6060–26–10 Siderail Assembly

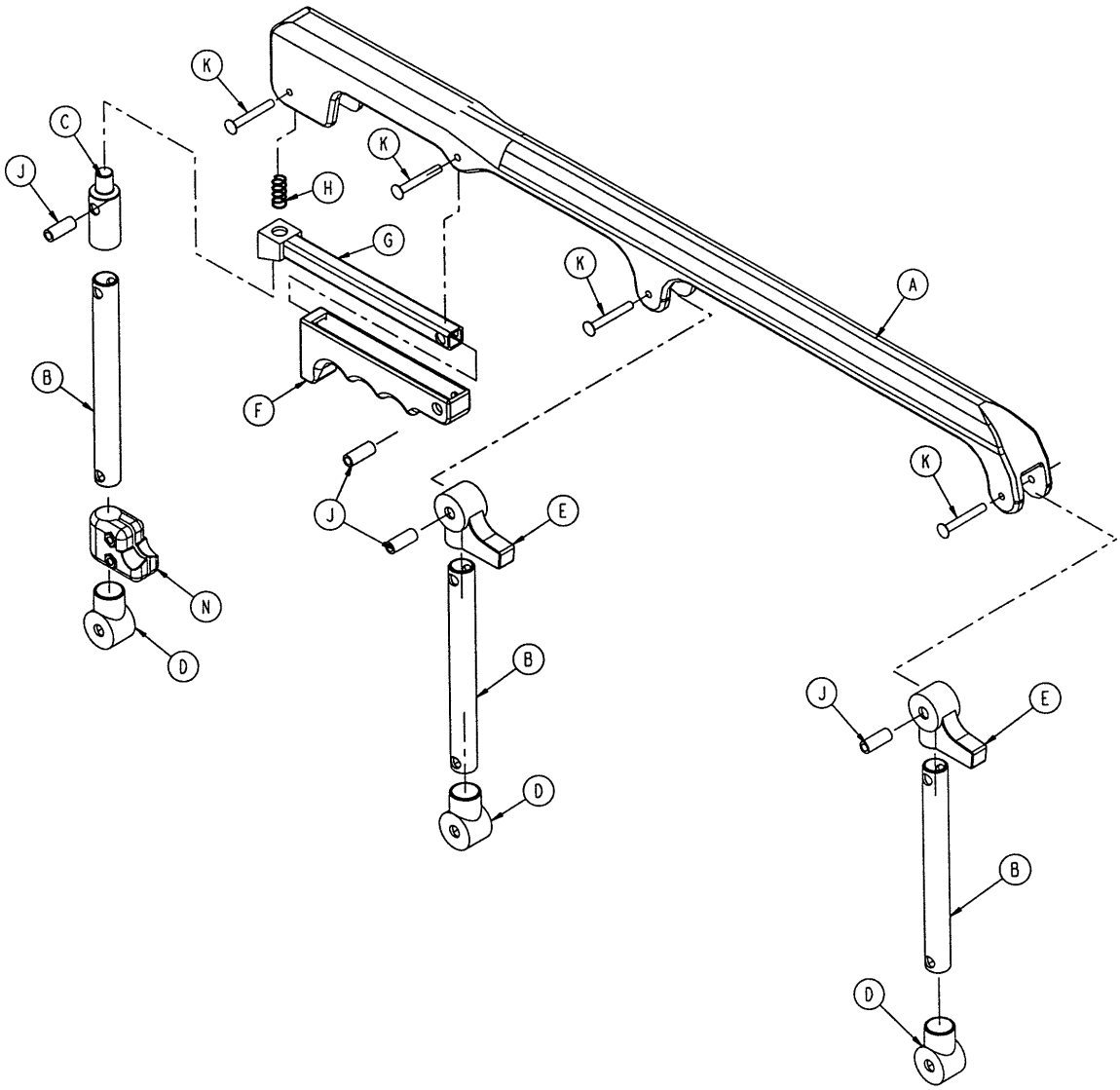

Item	Part No.	Part Name	Qty.
A	6060–25–24	Top Rail	1
B	6060–25–43	Spindle	3
C	6060–25–47	Spindle Lock	1
D	6060–25–41	Spindle Pivot	3
E	6060–25–40	Spindle Pivot Stop	2
F	6060–25–29	Lock Release Grip	1
G	6060–25–30	Lock Bar Weldment	1
H	38–344	Compression Spring	1
J	6060–25–35	Pivot Bushing	4
K	25–131	Rivet	4
N	1001–26–39	Ring Spacer Assembly	1

6100–115–20 3–Stage I.V. Assembly, Right
6100–116–20 3–Stage I.V. Assembly, Left

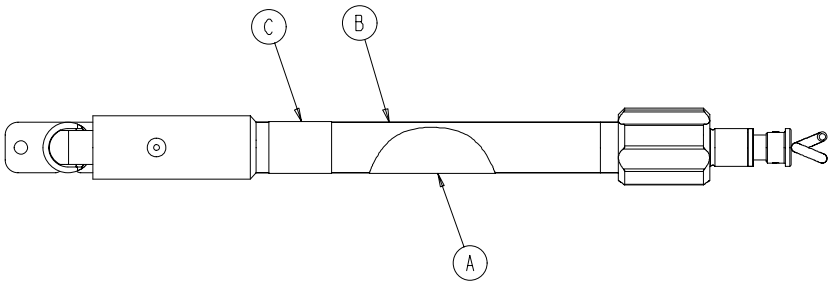

RIGHT

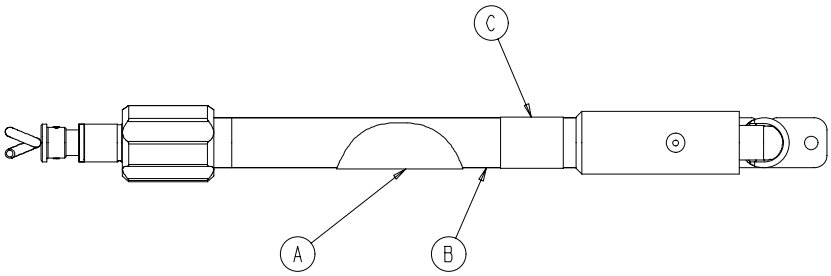

LEFT

Item	Part No.	Part Name	Qty.
A	6070–90–105	Caution Label	1
B	(page 58)	I.V. Pole Assembly	1
C	6100–200–7	Specification Label, Right	1
	6100–200–8	Specification Label, Left	1

6100–115–25 3–Stage I.V. Assembly

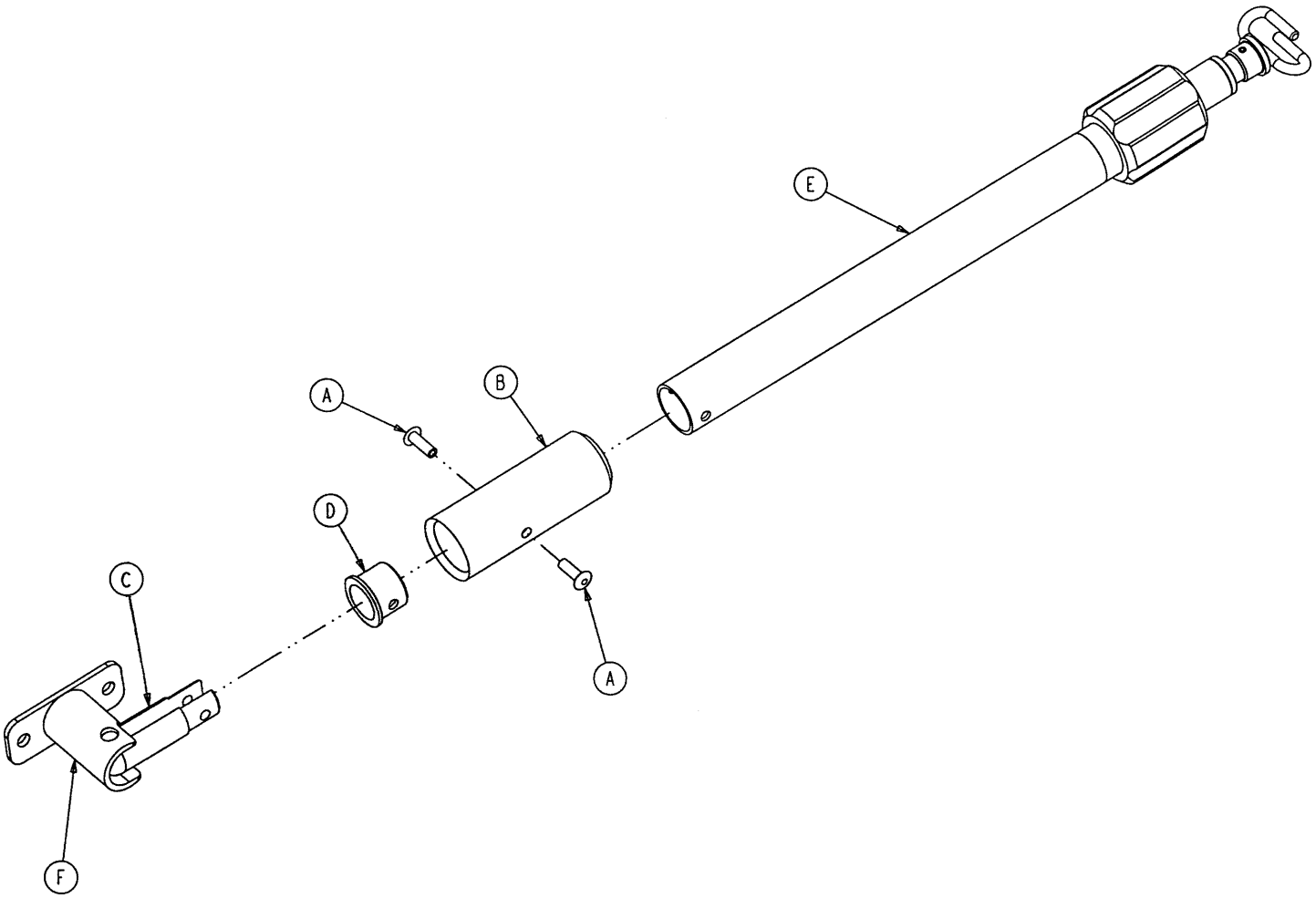

Item	Part No.	Part Name	Qty.
A	25–133	Blind Rivet	2
B	6070–210–45	I.V. Pole Sleeve	1
C	6070–210–46	I.V. Pivot	1
D	6070–210–49	I.V. Pivot Ring	1
E	(page 59)	Pole Assembly	1
F	6100–115–50	Socket Weldment	1

6100–115–40 I.V. Pole Assembly

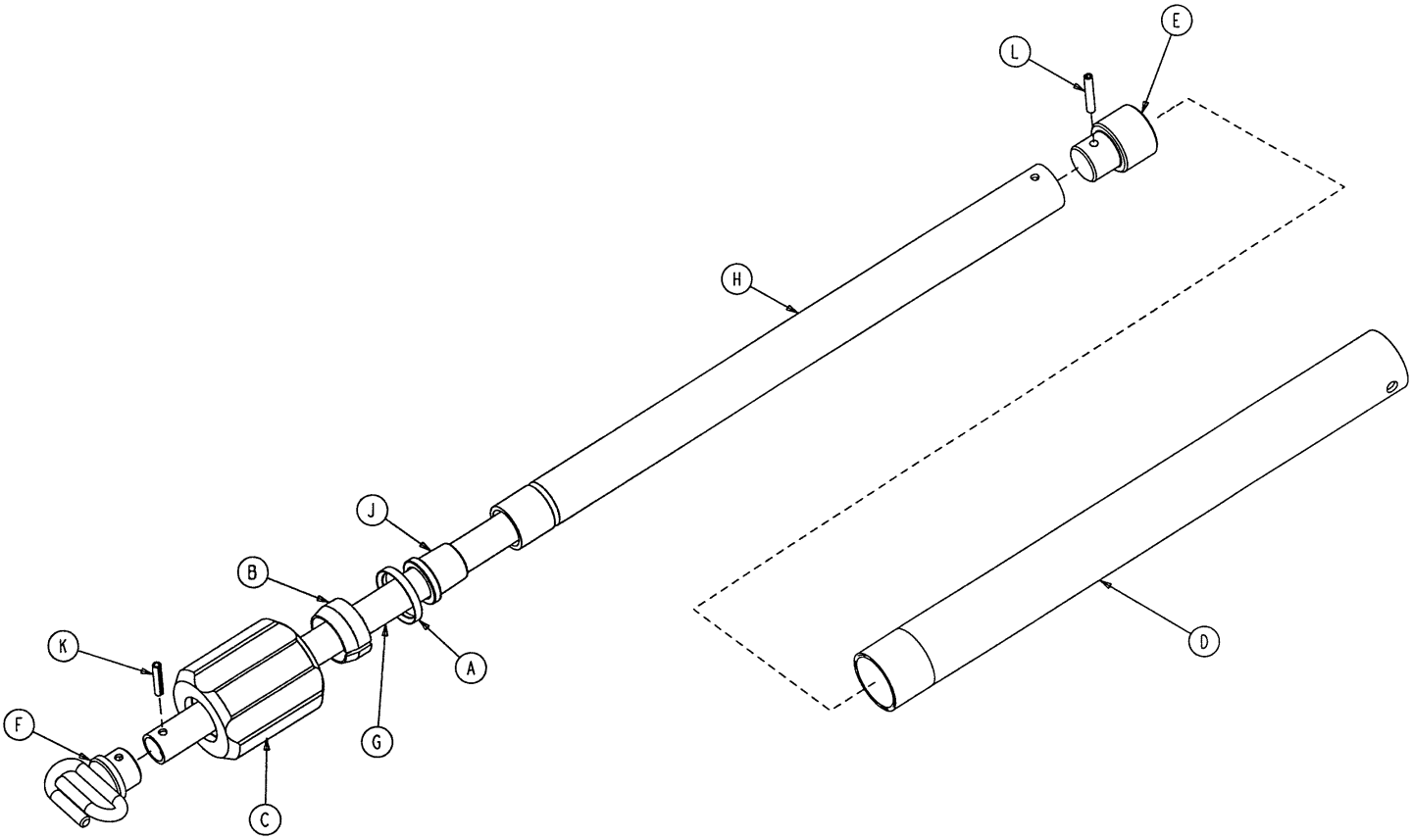

Item	Part No.	Part Name	Qty.
A	1210–110–46	Back–Up Ring	1
B	1210–110–47	Lock Ring	1
C	1210–110–49	Actuator	1
D	6100–115–41	Base Tube	1
E	6070–110–44	2nd Stage Slide Plug	1
F	6070–110–50	Hook Weldment	1
G	(page 60)	3rd Stage Assembly	1
H	6100–115–42	2nd Stage Tube	1
J	6070–115–45	Bearing Plug	1
K	26–5	Spring Pin	1
L	26–6	Spring Pin	1

6070–115–30 I.V. Pole 3rd Stage Assembly

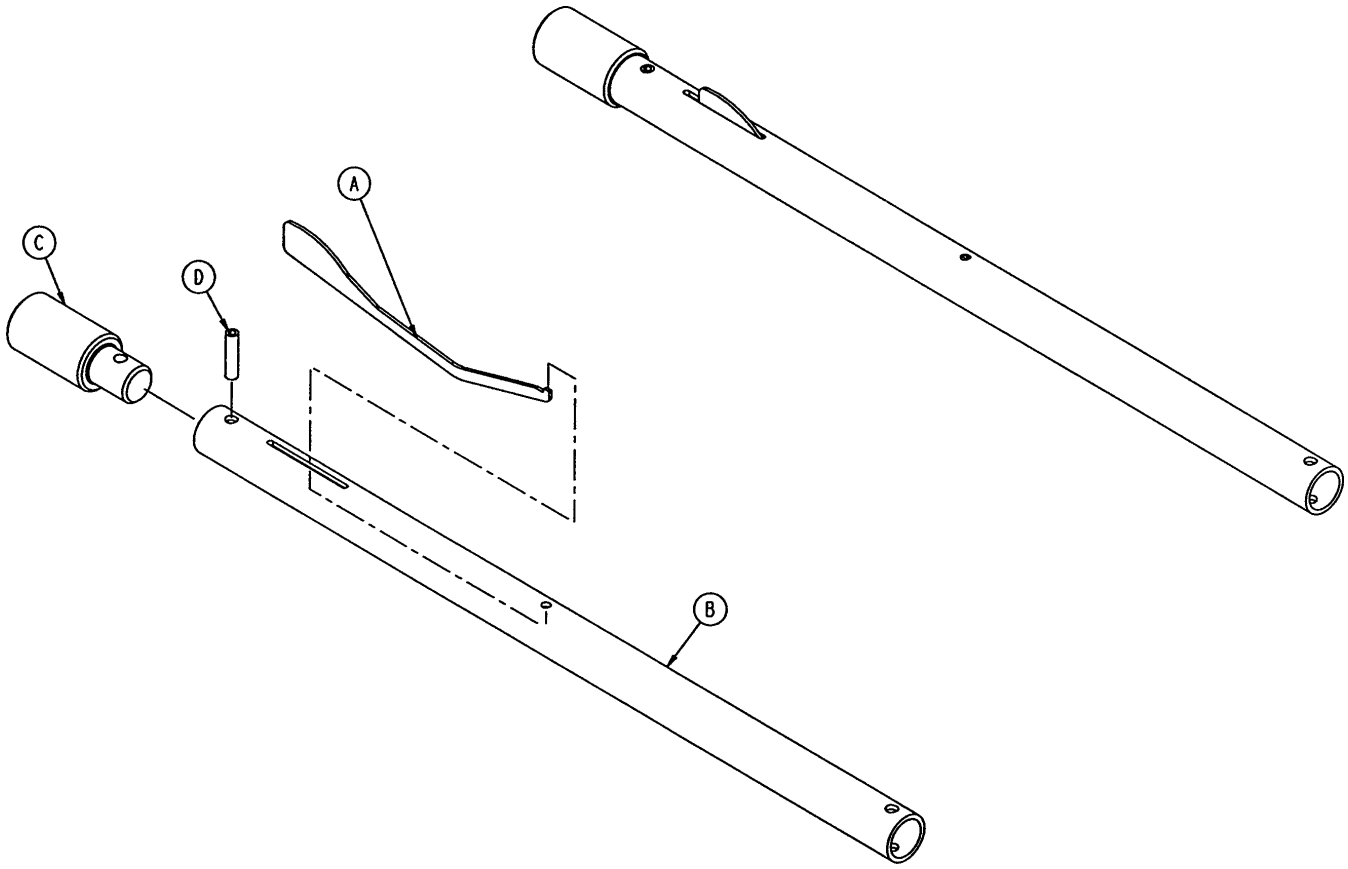

Item	Part No.	Part Name	Qty.
A	6070–115–141	Spring Clip	1
B	6070–115–143	3rd Stage Tube	1
C	6070–115–44	3rd Stage Slide Plug	1
D	26–4	Roll Pin	1

6080–140 Optional Hanging Oxygen Bottle Holder Ass’y

Assembly part number 6080–140–10 (reference only)

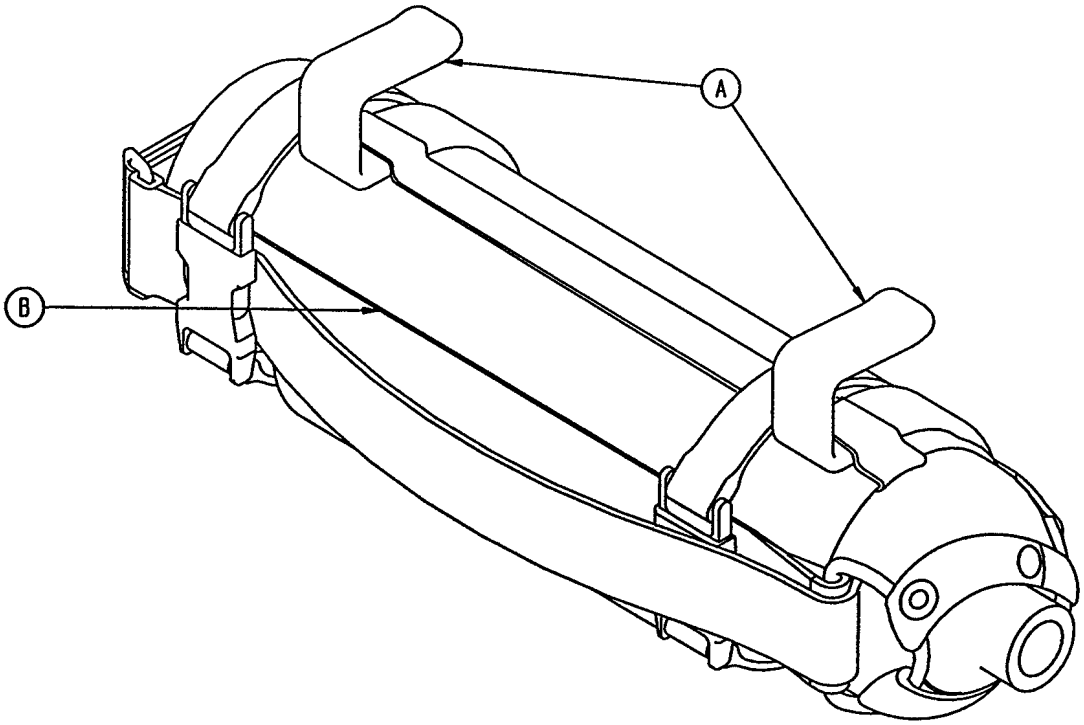

Item	Part No.	Part Name	Qty.
A	6080–140–11	Bottle Holder Hanger	2
B	6080–140–12	Oxygen Bottler Holder	1

Addresses / Adressen / Anschriften / Adresse / Indirizzi

Direcciónes / Endereços / Adresser

Stryker Howmedica/Osteonics Belgium
Ikaros Business Park – Fase II
Ikaroslaan 12
1930 Zaventem
Brussels
Tel. +3227179210
Fax +3227179249

Stryker Osteonics Lugano
Via Della Posta
P.O. Box 254
6934 Bioggio
Tel. +41916104410
Fax +41916104411

Stryker Howmedica Osteonics– Netherlands
Marinus van Meelweg 17 / Postbus 8747
5657 EN
Eindhoven
Nederland
Tel. +31402922522
Fax +31402922566

Stryker UK Limited
Stryker House
Hambridge Road
Newbury, Berkshire
RG14 5EG
England
Tel. +441635556500
Tel. +441635262400
Fax +441635556551

Stryker France SA
13, Rue de la Perdrix
Z.A.C. Paris Nord II
93290 Tremblay–En–France
France
B.P.50040
95946 Roissy Charles–de–Gaulle
France
Tel. +33148175000
Fax +33148632175

Stryker Howmedica Iberica S.L.
Manuel Tovar, 35
28034 Madrid
España
Tel. +34917283500
Tel. +34913582044
Fax +34913580748
VAT no ESB – 82173451

Stryker Howmedica Osteonics GmbH
Gewerbeallee 18
45478 Mülheim a.d. Ruhr
Deutschland
Tel. +49208999060
Fax +492089990666

Stryker Denmark
filial of Stryker AB
Postbox 772
1532 Copenhagen
Denmark
Tel. +4533936099
Fax +4533932069

Stryker Polska Sp. zo.o.
ul. Kolejowa 19/21
01–217 Warsawa
Poland
Tel. +48226312013
Tel. +48226312014
Fax +48226312015

Stryker MedSurg Group
Middle East/Africa Division
Suite 202, Al Masood Tower
Hamdan St.
P.O. Box 26589
Abu Dhabi, United Arab Emirates
Tel. +97126312145
Fax +97126313698

Stryker Osteonics (Pty) Ltd
3 Susan Street
Strydom Park
Johannesburg, 2194–South Africa
Tel. +27117914644
Fax (main) +27117914696
Fax (orders) +27117914697

Stryker Trauma S.A
5, Chemin des Aulx
1228 Plan–les–Ouates
Case Postale 725
1212 Grand–lancy 1
Tel. +41228840111
Fax +41228840199

AMTAC MEDIQA
ISO 9001 Registered

European Representative

Stryker France
BP 50040–95946 Roissy Ch. de Gaulle
Cedex–France

Phone: 33148632290
Fax: 33148632175

stryker®
Medical

6300 Sprinkle Road, Kalamazoo, MI 49001–9799

(800) 327–0770
www.strykermedical.com

CE

DH 3/01 6100–90–11 REV C